EN

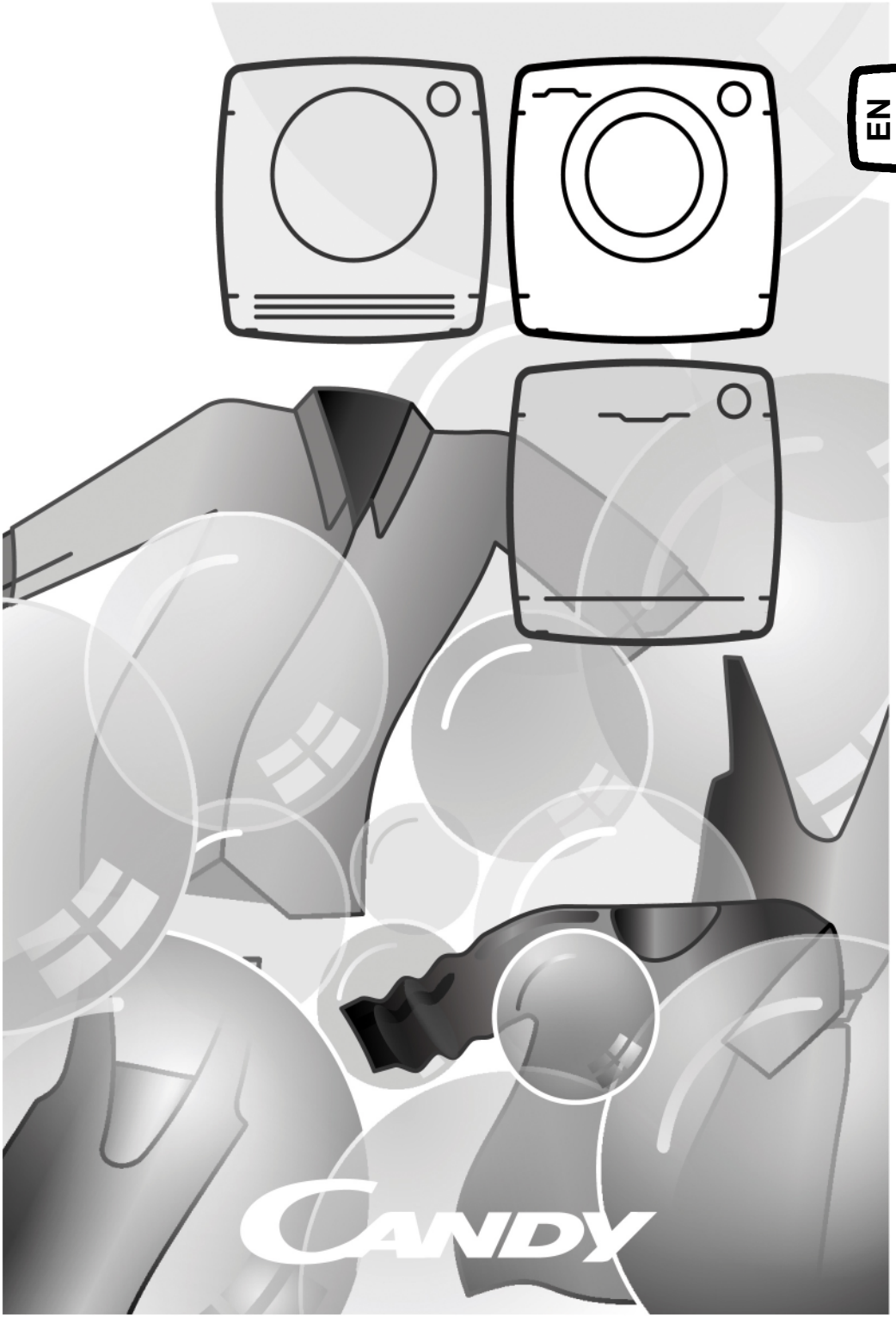

Thank-you for choosing a **Candy** washing machine. We are confident it will loyally assist you in safely washing your clothes, even delicates, day after day.

Carefully read this manual for correct and safe appliance use and for helpful tips on efficient maintenance.

 Only use the washing machine after carefully reading these instructions. We recommend you always keep this manual on hand and in good condition for any future owners.

Please check that the appliance is delivered with this instruction manual, warranty certificate, service centre address and energy efficiency label. Also check that plugs, drain hose support hook and liquid detergent or bleach tray (only on some models) are included. We recommend you keep all these components.

FOR U.K. ONLY
On receipt of your appliance please check it carefully for damage. Any damage found must be reported to the delivery driver immediately. Alternatively damage found must be reported to the retailer within 2 days of receipt.

Each product is identified by a unique 16-character code, also called the "serial number", printed on the sticker. This can be found inside the door opening. This code is a unique code for your product that you will need to register the product warranty, or if you need to contact the Customer Service Centre.

Environmental conditions



This appliance is marked according to the European directive 2012/19/EU on Waste Electrical and Electronic Equipment (WEEE).
WEEE contains both polluting substances (which can cause negative consequences for the environment) and basic components (which can be re-used). It is important to have WEEE subjected to specific treatments, in order to remove and dispose properly all pollutants, and recover and recycle all materials. Individuals can play an important role in ensuring that WEEE does not become an environmental issue; it is essential to follow some basic rules:

- WEEE should not be treated as household waste;
- WEEE should be handed over to the relevant collection points managed by the municipality or by registered companies. In many countries, for large WEEE, home collection could be present.

In many countries, when you buy a new appliance, the old one may be returned to the retailer who has to collect it free of charge on a one-to-one basis, as long as the equipment is of equivalent type and has the same functions as the supplied equipment.

Contents

1. ***GENERAL SAFETY RULES***
2. ***INSTALLATION***
3. ***PRACTICAL TIPS***
4. ***MAINTENANCE AND CLEANING***
5. ***QUICK USER GUIDE***
6. ***CONTROLS AND PROGRAMS***
7. ***DRYING CYCLE***
8. ***AUTOMATIC WASHING/DRYING CYCLE***
9. ***THROUBLESHOOTING AND WARRANTY***

1. GENERAL SAFETY RULES

- This appliances is intended to be used in household and similar applications such as:
  - Staff kitchen areas in shops, offices and other working environments;
  - Farm houses;
  - By clients in hotels, motels and other residential type environments;
  - Bed and breakfast type environments.

  A different use of this appliance from household environment or from typical housekeeping functions, as commercial use by expert or trained users, is excluded even in the above applications. If the appliance is used in a manner inconsistent with this it may reduce the life of the appliance and may void the manufacturer's warranty. Any damage to the appliance or other damage or loss arising through use that is not consistent with domestic or household use (even if located in a domestic or household environment) shall not be accepted by the manufacturer to the fullest extent permitted by law.

- This appliance can be used by children aged from 8 years and above and persons with reduced physical, sensory or mental capabilities or lack of experience and knowledge if they have been given supervision or instruction concerning use of the appliance in a safe way and understand the hazards involved.
  Children shall not play with the appliance. Cleaning and user maintenance shall not be made by children without supervision.

- Children should be supervised to ensure that they do not play with the appliance.

- Children of less than 3 years should be kept away unless continuously supervised.

- If the supply cord is damaged, it must be replaced by a special cord or assembly available from the manufacturer or its service agent.

- Only use the hose-sets supplied with the appliance for the water supply connection (do not reuse old hose-sets).

- Water pressure must be between 0.05 MPa and 0.8 MPa.

- Make sure carpets or rugs do not obstruct the base or any of the ventilation openings.

- The OFF condition is reached by placing the reference mark on the programmes control/knob in the vertical position. Any other different position of such control sets the machine in ON condition (only for models with programmes knob).

- The final part of a washer dryer cycle occurs without heat (cool down cycle) to ensure that the items are left at a temperature that ensures that the items will not be damaged.

⚠ WARNING:
never stop a washer dryer before the end of the drying cycle unless all items are quickly removed and spread out so that the heat is dissipated.

- After installation, the appliance must be positioned so that the plug is accessible.
- The appliance must not be installed behind a lockable door, a sliding door or a door with a hinge on the opposite side to that of the washer dryer, in such way that a full opening of the washer dryer door is restricted.
- The maximum load capacity of dry clothes depends on the model used (see control panel).
- The appliance is not to be used if industrial chemicals have been used for cleaning.
- Do not dry unwashed items in the washer dryer.
- Items that have been soiled with substances such as cooking oil, acetone, alcohol, petrol, kerosene, spot removers, turpentine, waxes and wax removers should be washed in hot water with an extra amount of detergent before being dried in the washer dryer.
- Items such as foam rubber (latex foam), shower caps, waterproof textiles, rubber backed articles and clothes or pillows fitted with foam rubber pads should not be dried in the washer dryer.
- Fabric softeners, or similar products, should be used as specified by the fabric softener instructions.
- Oil-affected items can ignite spontaneously, especially when exposed to heat sources such as a washer dryer. The items become warm, causing an oxidation reaction in the oil, Oxidation creates heat. If the heat cannot escape, items can become hot enough to catch fire. Piling, stacking or storing oil-effected items can prevent heat from escaping and so create a fire hazard.
- If it is unavoidable that fabrics contain vegetable or cooking oil or have been contaminated

by hair care products be placed in a washer dryer they should first be washed in hot water with extra detergent - this will reduce, but not eliminate, the hazard.

- Remove all objects from pockets such as lighters and matches.
- To consult the product technical specification please refer to the manufacturer website.

Safety instructions

- Before cleaning or maintaining the washing machine, unplug the appliance and turn off the water tap.
- Make sure the electrical system is earthed. Otherwise, seek qualified professional assistance.
- Please do not use converters, multiple sockets or extension cords.

WARNING:
water may reach very high temperatures during the wash cycle.

- Make sure there is no water in the drum before opening the door.
- Do not pull on the power cord or appliance to unplug the machine.
- Do not expose the washing machine to rain, direct sunlight or other weather elements. Protect from possible freezing.
- When moving, do not lift the washing machine by the knobs or detergent drawer; during transport, never rest the door on the trolley. We recommend two people lift the washing machine.
- In the event of fault and/or malfunction, turn off the washing machine, close the water tap and do not tamper with the appliance.
  Immediately contact the Customer Service Centre and only use original spare parts. Failure to observe these instruction may jeopardise appliance safety.

By placing the CE mark on this product, we are confirming compliance to all relevant European safety, health and environmental requirements which are applicable in legislation for this product.

2. INSTALLATION

- Release the power chord and drain hose from the securing clip at the rear of the machine.
- Remove the **2** or **4** transportation screws **(A)** on the back and remove the **2** or **4** flat washers, rubber bungs and plastic spacer tubes **(B)** as illustrated **in figure 1**.
- If the washing machine is built-in, unscrew the **3** or **4** transportation screws **(A)** and remove the **3** or **4** flat washers, rubber bungs and plastic spacer tubes **(B)**.
- During the removal of the screws occasionally spacer tubes fall inside the product, these can be remove by tilting the product forward and recovering them from the floor or inside the base of the machine.
- Cover the open transportation screw holes with the **2** or **4** plastic caps included in the instruction bag.

⚠ WARNING:
keep packaging materials away from children.

Place the corrugated plastic sheet, found on top of the appliance during the unpacking process, into the base of the appliance as shown in **figure 2** (according to the model, consider version **A**, **B** or **C**).

①

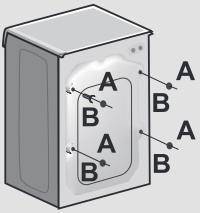

②

A

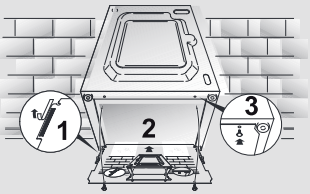

B

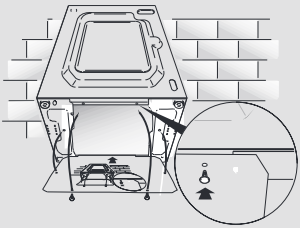

C

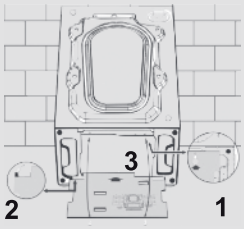

Instructions for mounting the furniture door

- Position the template onto the reverse of the furniture door. It is possible to mount the hinges and closure magnet on the right or left-hand side depending on your requirements. Mark the screw hole positions, then drill out these positions.

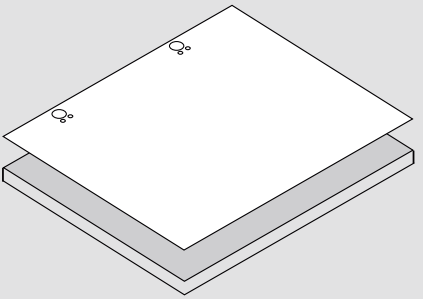

- Fix the hinges in place with the 4 screws provided **(A)**.

- Fix the magnet **(B)** in place using screw **(C)**.

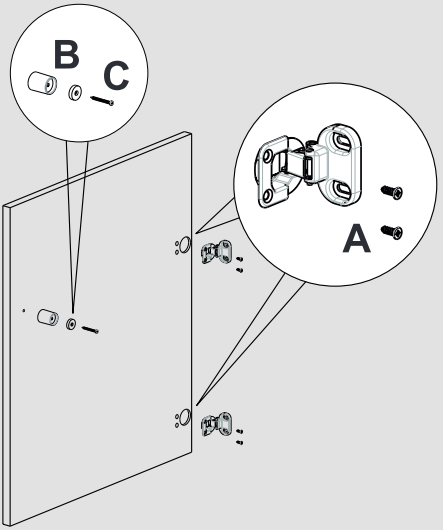

- Mount the plate **(D)** on the right or left-hand side, depending on your installation requirements. Place the plastic support **(E)** under the plate and fix it in position with screw **(F)**.

- Snap mount cap **(G)** in the lower position.

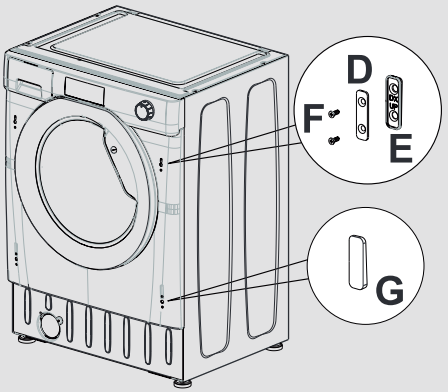

- Mount the furniture door to the front of the washer using the hinges. Place the spacers under the hinges **(I)** and then fix in position with screw **(H).**

We suggest mounting the furniture door so that it opens towards the left, which is the same direction as the porthole door. This will leave more space when you are loading washing into the appliance.

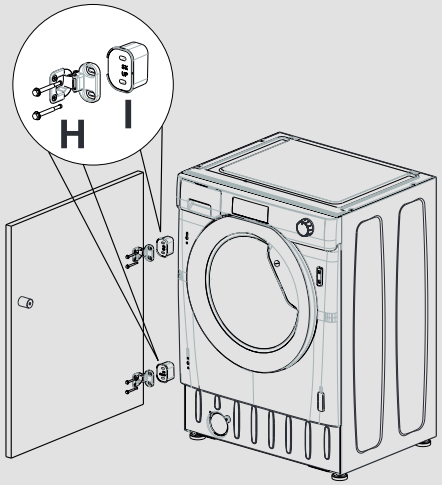

- Slide the washer into an opening of the size indicated in the diagram opposite. A furniture plinth may be run across the front of the appliance, but its height will be dictated by the height the washer is set at.

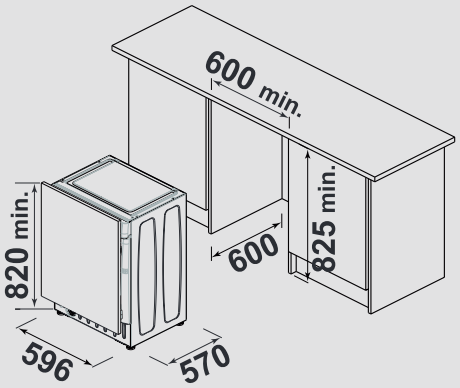

- The 4 adjustable feet allow the height of the washer to be adjusted from 820 mm to a maximum of 840 mm. To adjust the height, you should remove the nuts fitted to each foot and replace these with the 5 mm nuts supplied. Raise the feet to your desired height and then fully tighten the lock nut to the base of the washer.

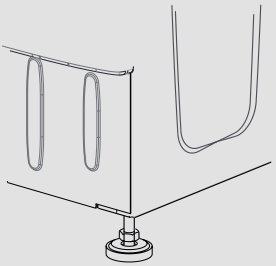

Hydraulic connections

- Connect the water hose to the water supply tap **(fig. 3)** only using the hose supplied with the appliance (do not reuse old hose-sets).

- Some models may include one or more of the following features:

- **HOT&COLD (fig. 4):**
  water mains connection settings with hot and cold water for higher energy savings. Connect the grey tube to the cold water tap ❄ and the red one to the hot water tap. The machine can be connected to the cold water tap only: in this case, some programs may start a few minutes later.

- **AQUASTOP (fig. 5):**
  a device located on the supply tube that stops water flow if the tube deteriorates; in this case, a red mark will appear in the window "**A**" and the tube must be replaced. To unscrew the nut, press the one-way lock device "**B**".

- **AQUAPROTECT – SUPPLY TUBE WITH GUARD (fig. 6):**
  Should water leak from the primary internal tube "**A**", the transparent containment sheath "**B**" will contain water to permit the washing cycle to complete. At the end of the cycle, contact the Customer Service Centre to replace the supply tube.

Setting

- The washing machine should be installed in its final position such that the water fill hose is not kinked or trapped. The corrugated drain hose should be inserted into suitable drain pipe of between 50 cm and 85 cm height above the floor using the curved drain hose support. If an under sink connection is used the drain hose must be routed above the sink overfill opening to prevent back siphoning. Care must be taken to avoid kinking or trapping the drain hose **(fig. 7)**.

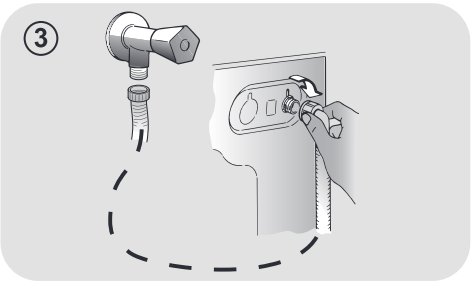

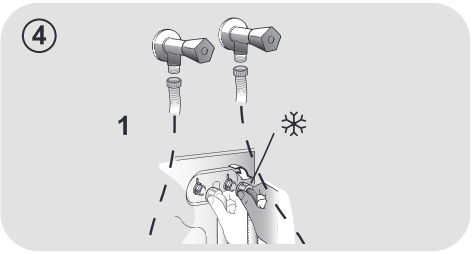

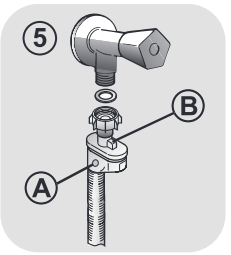

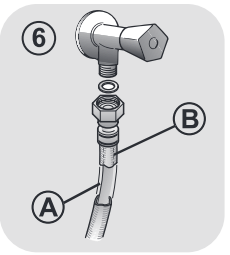

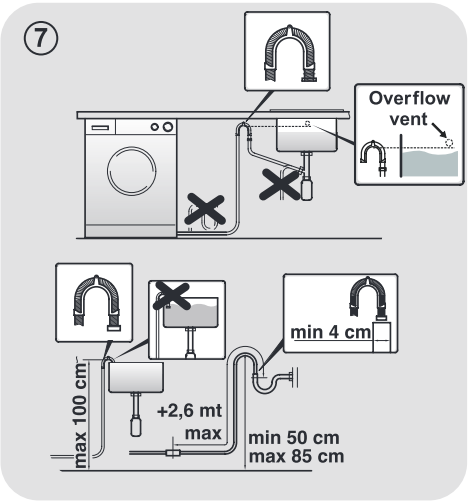

- Level the appliance using the feet as illustrated in **figure 8**:
  - **a**. turn the nut clockwise to release the screw;
  - **b**. rotate the foot to raise or lower it until it touches to the floor;
  - **c**. lock the foot, screwing in the nut, until it tightens against to the bottom of the washing machine.
- Plug in the appliance.

WARNING:
contact the Customer Service Centre should the power cord need replacement.

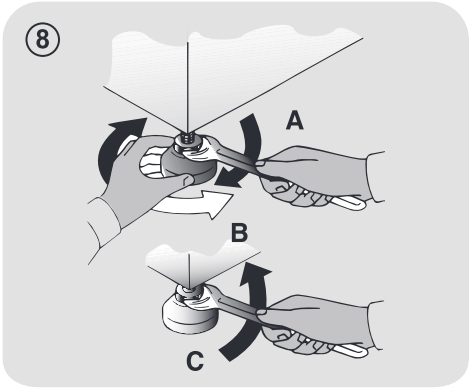

Detergent drawer

The detergent draw is split into 3 compartments as illustrated in **figure 9**:

- **compartment "1"**: for prewash detergent;
- **compartment "❀"**: for special additives, softeners, starch fragrances, etc.;

WARNING:
only use liquid products; the washing machine is set to automatically dose additives at each cycle during the last rinse.

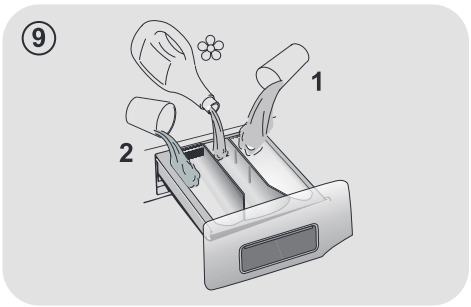

- **compartment "2":** for washing detergent.

A liquid detergent cup is also included **IN SOME MODELS (fig. 10)**. To use it, place it in **compartment "2"**. This way, liquid detergent will only enter the drum at the right time. The cup can also be used for bleach when the “Rinse” program is selected.

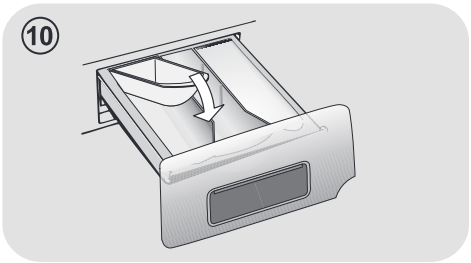

WARNING:
some detergents are hard to remove. In this case we recommend using the specific container to be placed in the drum (example in figure 11).

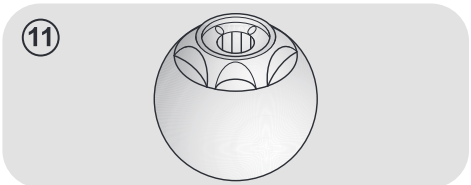

3. PRACTICAL TIPS

Load tips

WARNING: when sorting laundry, make sure:

- have eliminated metallic objects such as hair clips, pins, coins, from laundry;
- to have buttoned pillow cases, closed zips, tied loose belts and long robe ribbons;
- to have removed rollers, hooks or clips from curtains;
- to have carefully read clothing washing labels;
- to have removed any persistent stains using specific detergents.

- When washing rugs, bedcovers or other heavy clothing, we recommend you avoid the spinning cycle.
- To wash wool, make sure the item can be machine washed. Check the fabric label.

Helpful suggestions for the user

A guide environmentally friendly and economic use of your appliance.

Maximise The Load Size

- Achieve the best use of energy, water, detergent and time by using the recommended maximum load size.
  Save up to 50% energy by washing a full load instead of 2 half loads.

Do you need to pre-wash?

- For heavily soiled laundry only!
  SAVE detergent, time, water and between 5 to 15% energy consumption by NOT selecting Prewash for slight to normally soiled laundry.

Is a hot wash required?

- Pretreat stains with stain remover or soak dried in stains in water before washing to reduce the necessity of a hot wash programme. Save energy by using a low temperature wash programme.

Before using a drying programme (WASHER-DRYERS)

- SAVE energy and time by selecting a high spin speed to reduce the water content in laundry before using a drying programme.

Following is a **quick guide** with tips and recommendations on **detergent use at the various temperatures**. In any case, always read the instructions on the detergent for correct use and doses.

When washing heavily soiled whites, we recommend using cotton programs of 60°C or above and a normal washing powder (heavy duty) that contains bleaching agents that at medium/high temperatures provide excellent results.

For washes between 40°C and 60°C the type of detergent used needs to be appropriate for the type of fabric and level of soiling.
Normal powders are suitable for “white” or colour fast fabrics with high soiling, while liquid detergents or “colour protecting” powders are suitable for coloured fabrics with light levels of soiling.

For washing at temperatures below 40°C we recommend the use of liquid detergents or detergents specifically labeled as suitable for low temperature washing.

For washing **wool** or **silk**, only use detergents specifically formulated for these fabrics.

4. MAINTENANCE AND CLEANING

To clean the washing machine exterior, use a damp cloth, avoiding abrasives, alcohol and/or solvents. To maintain a good wash performance we recommend that the soap drawer and pump filters are regularly cleaned. A monthly service wash, using a proprietary cleaner is also recommended.

Drawer cleaning

- We recommend you clean the drawer to avoid accumulating detergent and additive residue.
- To do this, extract the drawer using slight force, clean it with running water and reinsert it in its housing.
- Ensure the siphon cap is correctly refitted.

Filter cleaning

- The washing machine comes with a special filter able to trap large residue, such as buttons or coins, which could clog the drain.
- **ONLY AVAILABLE ON CERTAIN MODELS**: pull out the corrugated hose, remove the stopper and drain the water into a container.
- Ensure all the water has been emptied from the drum.
- Before unscrewing the filter, we recommend you place an absorbent cloth under it to keep the floor dry. A small amount of water will come out of the filter as you remove it - this is normal.
- Turn the filter counter-clockwise to the limit stop.
- Remove and clean the filter; when finished, replace it turning it clockwise. The filter handle will be locked when it is not possible to turn any further and the handle is horizontal. Smearing a small amount of liquid soap on the filter seal will help refitting.
- Repeat the previous steps in reverse order to reassemble all parts.

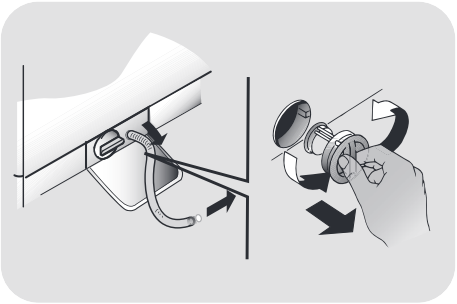

Suggestions for moves or prolonged disuse

- Should the washing machine be stored in an unheated room for a long period of time, drain all water from tubes.
- Unplug the washing machine.
- Detach the tube from the drainage system and clip on the rear of the machine and lower it, fully draining water into a bowl.
- Secure the drain tube with the drainage system and clip on the rear of the machine when finished.
- Keep the door glass and gasket clean.

The manufacturers warranty only covers faults within the product of a mechanical or electrical nature. Faults caused by handling, installation or miss use are not covered and may incur a charge for any repair visit to resolve.

5. QUICK USER GUIDE

This washing machine automatically adjusts the level of the water to the type and quantity of washing. This system gives a reduction in energy consumption and a saving in washing times.

Program selection

- Turn on the washing machine and select the required program.
- Adjust the washing temperature if necessary and press the required "option" buttons.

DRYING
If you would like the drying cycle to begin automatically after washing, select the programme required using the DRYING SELECTION button.
Or you can finish the wash and then select the drying programme and load size.

- Press the **START/PAUSE** button to start washing.
- At the end of the programme, the message "End" will appear on the display or, on some models, all wash stage indicator lights will turn on.

Wait until the DOOR LOCKED light has gone out before opening the door.

- Turn off the washing machine.

For any type of wash, see the program table and follow the operating sequence as indicated.

Technical data

Water pressure:
min 0.05 Mpa / max 0.8 Mpa
(0.05 MPa dispenses approximately 1 litre of water in 10 seconds)

Spin r.p.m.: See rating plate.

Power input / Power current fuse amp / Supply voltage: See rating plate.

6. CONTROLS AND PROGRAMS

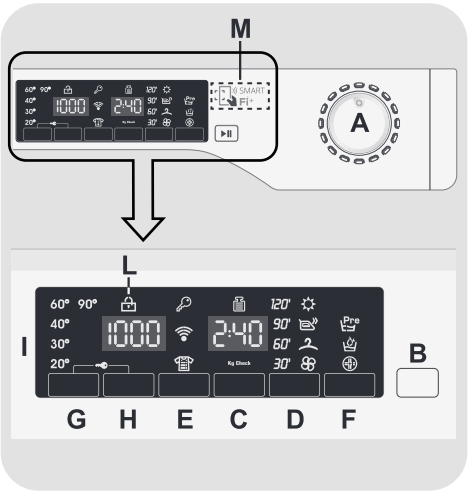

A Programme selector with OFF position
B START/PAUSE button
C DELAY START button
D DRYING SELECTION button
E RAPID / STAIN LEVEL button
F OPTIONS button
G TEMPERATURE SELECTION button
H SPIN SPEED button
G+H KEY LOCK
I Digital display
L DOOR LOCKED indicator light
M SMART Fi+ area

⚠ WARNING:
Don't touch the display while inserting the plug because the machines calibrates the systems during the first seconds: touching the display, the machine couldn't work property. In this case, remove the plug and repeat the operation.

PROGRAMME selector with OFF position

When the programme selector is turned the display lights up to show the settings for the programme selected.
For energy saving, at the end of the cycle or with an inactivity period, the display level contrast will decrease.

N.B.: To switch the machine off, turn the programme selector to the OFF position.

- Press the **START/PAUSE** button to start the selected cycle.
- Once a programme is selected the programme selector remains stationary on the selected programme till cycle ends.
- **"End"** will appear in the display at the end of the program and the DOOR LOCKED light will go off, it is now possible to open the door.
- Switch off the washing machine by turning the selector to **OFF**.

The programme selector must be returned to the OFF position at the end of each cycle or when starting a subsequent wash cycle prior to the next programme being selected and started.

START/PAUSE button

Close the door BEFORE selecting the button START/PAUSE.

- Press to start the selected cycle.

When the START/PAUSE button has been pressed, the appliance can take few seconds before it starts working.

ADD OR REMOVE ITEMS AFTER THE PROGRAMMES HAS STARTED (PAUSE)

- Press and hold the **START/PAUSE** button for about **2 seconds** (some indicator light and the time remaining indicator will flash, showing that the machine has been paused).
- Wait until the DOOR LOCKED light has gone out before opening the door.

Before you open the door, please check water level is below the door opening to avoid flooding.

- After you have added or removed items, close the door and press the **START/PAUSE** button (the programme will start from where it left off).

CANCELLING THE PROGRAMME

- To cancel the programme, set the selector to the **OFF** position.
- Wait **2 minutes** until the safety device unlocks the door.

DELAY START button

- This button allows you to pre-programme the wash cycle to delay the start of the cycle for up to **24 hours**.

- To delay the start use the following procedure:

  - Select the required programme.

  - Press the delay start button once to activate it (**h00** appears on the display) and then press it again to set a **1 hour** delay (**h01** appears on the display). The pre-set delay increases by **1 hour** each time the button is pressed, until **h24** appears on the display, at which point pressing the button again will reset the delay start to zero.

  - Confirm by pressing the **START/PAUSE** button. The delay countdown will begin and when it has finished the programme will start automatically.

- It is possible to cancel the delay start by turning the programme selector to **OFF.**

If there is any break in the power supply while the machine is operating, a special memory stores the selected programme and, when the power is restored, it continues where it left OFF.

The option buttons should be selected before pressing the START/PAUSE button. If an option is selected that is not compatible with the selected programme then the option indicator light first flashes and then goes off.

DRYING SELECTION

- **For automatic washing/drying cycle:** after the selection of washing programme according to laundry type, select a degree of dryness by pressing this button. At the end of the washing programme, the selected drying cycle will start automatically.

If a washing programme is not compatible with automatic drying selected, this function will not be activated.

If you exceed the maximum dryable load of laundry indicated in the programme table, the laundry may not be dried satisfactory.

- If you want delete the selection **before the programme starts**, please press repeatedly the button until the lights go off or reposition the programme selector to the **OFF** position.

- **Drying only cycle:** select via the knob the desired drying programme in conjunction with your fabrics, by pressing this button it is possible to select a degree of dryness that is different to the default one (except for the wool drying programme).

- To cancel the cycle **during the drying phase**, please press the button for about **3 seconds**.

WARNING:
After cancelling the drying programme, the cool down phase will begin and please wait for about 10/20 minutes before opening the door.

- **"End"** will appear in the display at the end of the program and the DOOR LOCKED light will go off, it is now possible to open the door.

It is also possible to cancel the drying cycle by turning the programme selector to the OFF position. It is necessary to wait for the cooling phase's end (10/20 minutes) and the DOOR LOCKED light to go off before opening the door.

RAPID / STAIN LEVEL button

This button allows you to choose between two different options, depending on the selected programme:

- RAPID

The button becomes active when you select the **RAPID (14/30/44 Min.)** programme on the knob and allows you to select one of three durations indicated.

- STAIN LEVEL button

- Once the programme has been selected the wash time set for that programme will be automatically shown.

- This option allows you to choose between 3 levels of wash intensity modifying the length of the programme, depending on how much the fabrics are soiled (can only be used on some programmes as shown in the table of programmes).

OPTIONS button

This button allows you to choose between three different options:

- PREWASHING

- This option allows you to make a prewash and it is particularly useful for heavily soiled loads (can be used only on some programmes as shown in the table of programmes).

- We recommend you use only 20% of the recommended quantities shown on the detergent pack.

- AQUAPLUS

- This option (available only in some programmes) allows you to wash the load in a much larger quantity of water and this, together with the new combined action of the drum rotation cycles, where water is filled and emptied, will give you garments which have been cleaned and rinsed to perfection so that the detergent dissolves completely, ensuring an efficient cleaning action.

- This function is for the people with delicate and sensitive skin.

- This function can be used for children's items and for washing of very dirty items, for which you are required to use a lot of detergent, or for washing of Towels whose fibres have the tendency to hold the detergent.

- HYGIENE +

Activated when you set 60°C of temperature. This option allows deep cleaning of your clothes by maintaining the same temperature for the whole wash.

TEMPERATURE SELECTION button

- This button allows you to change the temperature of the wash cycles.

- It is not possible to raise the temperature over the maximum allowed for the programme, in order to protect the fabrics.

- If you want carry out a cold wash all the indicators must be off.

SPIN SPEED button

- By pressing this button, it is possible to reduce the maximum speed, and if you wish, the spin cycle can be cancelled.

- If the label does not indicate specific information, it is possible to use the maximum spin expected in the program.

To prevent damage to the fabrics, it is not possible to increase the speed over the maximum allowed for the programme.

- To reactivate the spin cycle press the button until you reach the spin speed you would like to set.

- It is possible to modify the spin speed without pausing the machine.

An over dosing of detergent can cause excessive foaming. If the appliance detects the presence of excessive foam, it may exclude the spinning phase or extend the duration of the program and increase water consumption.

The machine is fitted with a special electronic device, which prevents the spin cycle should the load be unbalanced. This reduces the noise and vibration in the machine and so prolongs the life of your machine.

KEY LOCK

- Pressing simultaneously the buttons **TEMPERATURE SELECTION** and **SPIN SPEED** for about **3 seconds**, the machine allows you to lock the keys. In this way, you can avoid making accidental or unwanted changes if a button on the display is pressed accidently during a cycle.

- The key lock can be simply cancelled by pressing the two buttons simultaneously again or turning off the appliance.

Digital Display

The display's indicator system allows you to be constantly informed about the status of the machine.

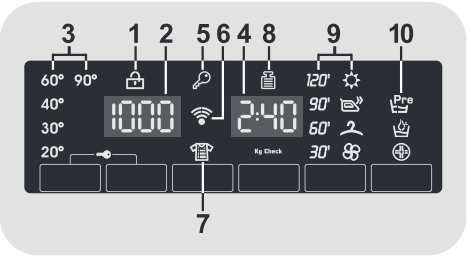

1) DOOR LOCKED INDICATOR LIGHT

- The indicator light is illuminated when the door is fully closed.

Close the door BEFORE selecting the START/PAUSE button.

- When **START/PAUSE** is pressed on the machine with the door closed, the indicator will flash momentarily and then illuminate.

If the door is not properly closed, the light will continue to flash for about 7 seconds, after which the start command will be automatically delete. In this case, close the door in the proper way and press the START/PAUSE button.

- Wait until the DOOR LOCKED light has gone out before opening the door.

2) SPIN SPEED

This show the spin speed of the selected programme that can be changed or omitted by the relevant button.

3) WASH TEMPERATURE INDICATOR LIGHTS

This shows the washing temperature of the selected programme that can be changed (where allowed) by the relevant button.
If you want carry out a cold wash all the indicators must be off.

4) CYCLE DURATION

- When a programme is selected the display automatically shows the cycle duration, which can vary, depending on the options selected.
- Once the programme has started you will be kept informed constantly of the time remaining to the end of the wash.
- The appliance calculates the time to the end of the selected programme based upon a standard loading, during the cycle, the appliance corrects the time to that applicable to the size and composition of the load.

5) KEY LOCK INDICATOR LIGHT

The indicator light show that the keys are locked.

6) WI-FI (some models only)

- In the models with the Wi-Fi option, the icon indicates that the Wi-Fi system is working.
- For all the information about the functionality and the instructions for an easy configuration of the Wi-Fi, please refer to the **"Download"** section on **http://simplyfiservice.candy-hoover.com**.

7) STAIN LEVEL INDICATOR LIGHT

The indicator light shows the selection of the relevant option.

8) Kg Check *(function active only on certain programmes)*

- During the first minutes of the cycle, the **"Kg Check"** indicator remain on while the intelligent sensor will weigh the laundry and adjust the cycle time, water and electricity consumption accordingly.
- Through every wash phase **"Kg Check"** allows to monitor information on the wash load in the drum and in the first minutes of the wash it:
  - adjusts the amount of water required;
  - determines the length of the wash cycle;
  - controls rinsing according to the type of fabric selected to be washed it;
  - adjusts the rhythm of drum rotation for the type of fabric being washed;
  - recognizes the presence of lather, increasing, if necessary, the amount of water during rinsing;
  - adjusts the spin speed according to the load, thus avoiding any imbalance.

9) DRYING SELECTION INDICATOR LIGHTS

The indicators display the degrees of dryness that can be selected by the relevant button:

Automatic drying programmes

EXTRA DRY
(suitable for towels, bathrobes and bulky loads).

IRON DRY
(that leaves the laundry ready for ironing).

CUPBOARD DRY
(for items that will be put away without ironing).

Timed drying programmes

120' 90' 60' 30'

They may be used to select timed drying programmes.

Cool down phase

Activated during the final cool down period, in the last 10/20 minutes of each drying phase.

10) OPTIONS INDICATOR LIGHTS

The indicator lights show the option that can be selected by the relevant button.

SMART Fi+

This appliance is equipped with **SMART Fi+** technology that allows you to control it remotely via App, thanks to Wi-Fi function.

MACHINE ENROLLMENT (ON APP)

- Connect the appliance to the power supply.

We suggest that the Wi-Fi enrolment procedure is completed before positioning the appliance into the aperture.

- Download the ***Candy simply-Fi*** App on your device.

The *Candy simply-Fi* App is available for devices running both Android and iOS, both for tablets and for smartphones.

Get all the details of the SMART Fi+ functions by browsing the App in DEMO mode.

- Open the App, create the user profile and enroll the appliance following the instructions on the device display or the **"Quick Guide"** attached on the machine.

Using an Android smartphone equipped with NFC technology (Near Field Communication), the enrollment process is simplified (Easy Enrollment); in this case, follow the instructions on the phone display, PLACE AND KEEP IT NEAR the SMART Fi+ logo on the machine dashboard, when requested to do so by the App.

NOTES:

Place your smartphone so that the NFC antenna on its back matches the position of the SMART Fi+ logo on the appliance.



If you do not know the position of your NFC antenna, slightly move the smartphone in a circular motion over the SMART Fi+ logo until the App confirms the connection. In order for the data transfer to be successful, it is essential TO KEEP THE SMARTPHONE ON THE DASHBOARD DURING THESE THE FEW SECONDS OF THE PROCEDURE; a message on the device will inform about the correct outcome of the operation and advise you when it is possible to move the smartphone away.

Thick cases or metallic stickers on your smartphone could affect or prevent the transmission of data between machine and telephone. If necessary, remove them.

The replacement of some components of the smartphone (e.g. back cover, battery, etc...) with non-original ones, could result in the NFC antenna removal.

ENABLE REMOTE CONTROL (VIA APP)

After the machine enrollment, every time you want to manage it remotely through the App, firstly you have to load the laundry, the detergent, close the door and select the **SMART FI+** position on the machine. From that moment on you can manage it through the App commands.

Table of programmes

PROGRAMME		kg (MAX.) * (see control panel)						1) °C (MAX.)	2	❀	1
		6+4kg	6+5kg	7+5kg	8+5kg	8+6kg	9+6kg				
Whites	2) 4)	6	6	7	8	8	9	90°	●	●	(●)
Cottons**	2) 4)	**6**	**6**	**7**	**8**	**8**	**9**	60°	●	●	(●)
Synthetics	2) 4)	3	3	3,5	4	4	4,5	60°	●	●	
Baby Care	2) 4)	4	4	4,5	5,5	5,5	6	60°	●	●	
Daily 59 Min.	4)	2	2	2,5	3	3	3	60°	●	●	
Rapid 3) 4)	**14'**	1	1	1	1,5	1,5	1,5	30°	●	●	
	30'	2	2	2,5	2,5	2,5	2,5	30°	●	●	
	44'	3	3	3,5	3,5	3,5	3,5	40°	●	●	
Delicates		2	2	2,5	2,5	2,5	2,5	40°	●	●	
Rinse		-	-	-	-	-	-	-	△	●	
Drain + Spin		-	-	-	-	-	-	-			
Wool/Silk		1	1	1	2	2	2	30°	●	●	
Dry Wool		1	1	1	2	2	2	-			
Low Heat (drying)		3	3	3,5	4	4	4,5	-			
High Heat (drying)		**4**	**5**	**5**	**5**	**6**	**6**	-			
Rapid W&D 59 Min.		1,5	1,5	1,5	1,5	1,5	1,5	30°	●	●	

Smart Fi+

Position that you have to select when you want to enable remote control through the App (via Wi-Fi). If the machine hasn't been enrolled yet, pressing the **START/PAUSE** button on the appliance, the **"Auto-Clean"** cycle, made to clean the drum, will be performed.

Please read these notes:

* Maximum load capacity of dry clothes, according to the model used (see control panel).

△ **(Only for models with liquid detergent compartment)**
When only a limited number of articles have stains which require treatment with liquid bleaching agents, preliminary removal of stain can be carried out in the washing machine.
Pour the bleach into the liquid bleach container, inserted into the compartment marked **"2"** in the detergent drawer, and set the special programme RINSE.
When this phase has terminated, turn the programme selector to the OFF position, add the rest of the fabrics and proceed with a normal wash on the most suitable programme.

(●) Only with PREWASH option selected (programmes with PREWASH option available).

1) When a programme is selected, on the display is shown the display shows the recommended wash temperature that can be reduced (where allowed) by the relevant button.

2) For the programmes shown you can adjust the duration and intensity of the wash using the STAIN LEVEL button.

3) Selecting the RAPID program on the knob, it will be possible to select with the RAPID button, one of the three rapid programs available among 14', 30' and 44'.

4) Programmes for automatic drying.

INFORMATION FOR THE TEST LABORATORIES (Ref. EN 50229 Standards)

Washing
Use the programme ****** with the maximum degree of soiling selected, maximum spin speed and a temperature of 60°C. Programme recommended also for test with a lower temperature.

Drying
First drying with **A kg** (a load consist: pillowcases and hand-towels) selecting the cotton drying programme (High Heat ☼☼) cupboard dry ( ).

Second drying with **B kg** (a load consist: sheets and hand towels) selecting the cotton drying programme (High Heat ☼☼) cupboard dry ( ).

Capacity (washing) (kg)	A (kg)	B (kg)
	First drying	Second drying
6	4	2
6	5	1
7	5	2
8	5	3
8	6	2
9	6	3

Programmes selection

To clean different types of fabrics and various levels of dirt, the washing machine has specific programs to meet every need of washing (see table of programmes).

WASHING

Whites
An intensive wash. The final spin at maximum speed gives more efficient removal.

Cottons
This program is suitable to clean normally soiled cotton laundry and it is the most efficient program in terms of combined energy and water consumptions for washing cotton laundry.

Synthetics
The washing and rinsing optimise the speed and rhythm of the drum action and water levels. The gentle spin, ensures a reduced formation of creases in the fabric.

Baby Care
This program allows you to wash all baby clothes getting a perfect clean and sanitizing effect, setting the temperature at 60°C minimum.
To optimize the result of the sanitizing effect we recommend the use of powder detergent.

Daily 59 Min.
This specially designed programme maintains the high quality wash performance whilst greatly reducing the wash time. The programme is designed for a reduced load (see table of programmes).

Rapid (14/30/44 Min.)
Washing cycle suggested for low loads and slightly dirty. With this program it is recommended to reduce the quantity of detergent normally used, in order to avoid unnecessary waste. Selecting the RAPID program and acting on the button you can choose one of three programs available.

Delicates
This program has reduced periods of drum rotation during the cycle and is particularly suitable or washing delicate fabrics. The wash cycle and rinses are carried out with a high level of water to ensure the best performance.

Rinse
This program performs 3 rinses with an intermediate spin (which can be reduced or excluded by using the appropriate button) . It is used for rinsing any type of fabric, for example after a wash carried out by hand.

Drain + Spin
The program completes the drain and a maximum spin. It is possible to delete or reduce the spin with the SPIN SPEED button.

Wool/Silk
This programme allows a delicate washing cycle, particularly suited to garments specified as "Machine-Washable" Wool fabrics and laundry items made from Silk or specified as "Wash as Silk" on the fabric label.

DRYING

WARNING:
Dispensers used for concentrated powders and liquid detergents must be removed from the drum before commencing the tumble drying programmes.

The drum changes direction during the drying cycle to prevent the laundry from tangling and producing even more drying. Cool air is used during the last 10/20 minutes of the drying cycle to minimize creasing.

Dry Wool
Low temperature drying programme, ideal to dry woollen clothes with maximum care and softness, reducing rubbing of fabrics and avoid possible felting. It's suggested to reverse clothing before drying. Timing is related to the amount of the washing and the spin speed selected for the wash. The cycle is suitable for small loads up to 1 kg (3 sweaters).

APPAREL CARE

The wool drying cycle of this machine has been approved by "The Woolmark Company" for the drying of machine washable wool products provided that the products are washed and dried according to the instructions on the garment label and those issues by the manufacturer of this machine.

The Woolmark symbol is a Certification mark in many countries. M1715

Mixed (Low Heat)
Low temperature drying programme recommended for synthetics and mixed fibres (always refer to the laundry care label).

Cottons (High Heat)
High temperature drying programme recommended for cottons and linen items (always refer to the laundry care label).

Rapid W&D 59 Min.
When you only have a few items to wash and dry in a hurry, this 59 minute cycle is the ideal time saver! Suitable for a light 1,5 kg load size (e.g. 4 shirts) or slightly dirty fabrics, this cycle will wash, rinse, spin and dry your garments in under an hour. We recommend that you reduce the detergent dosage when using this programme to avoid wastage.

SMART Fi+

Smart Fi+

Position that you have to select when you want to enable remote control through the App (via Wi-Fi). In this case, the start of cycle will take place through the App commands. If the machine hasn't been enrolled yet, pressing the **START/PAUSE button on the appliance**, the **"Auto-Clean"** cycle will be performed. Designed to sanitize the drum, remove bad smells and extend the life of the appliance, make sure there is no load in the drum before starting the **"Auto-Clean"** cycle and use a proprietary washing machine cleaning agent or powder detergent. Leave the door of the machine open at the end of the cycle to allow the drum to dry. Recommended every 50 washes.

7. DRYING CYCLE

- Drying guidance advice is general, but practical experience of using the product will help you to achieve the best drying results.

- We recommend setting a lower drying time than indicated, when first using the appliance in order to establish the degree of dryness required.

- We recommend not drying fabrics that fray easily, such as rugs or garments with a deep pile, in order to avoid air duct clogging.

- We recommend that you sort the laundry by the following methods:

- By drying care symbols, which are displayed on the clothing labels

 Suitable for tumble drying.

 Tumble dry at high temperature.

 Tumble dry at low temperature only.

 **DO NOT** tumble dry.

If the fabric does not have a care label, you should assume that it is not suitable for drying.

- By size and thickness
Whenever the wash load is bigger than the drying capacity, separate the clothes according to thickness (e.g. towels from thin underwear).

- By fabric type
Cottons/linen: towels, cotton jersey, bed and table linen.
Synthetics: blouses, shirts, overalls, etc. made of polyester or polyamide, as well as for cotton/synthetic mixes.

- Only dry pre-spun laundry.

The correct way to dry

- Open the door.

- Fill with the laundry, not exceeding the maximum drying load indicated in the programme table. For large items (e.g. sheets) or very absorbent items (e.g. towels or jeans), it is a good idea to reduce the load.

- Close the door.

- Turn the programme dial to the more suitable drying programme for your laundry.

- The washer dryer can perform the following types of drying:

Dry Wool 
- **Low temperature** drying programme recommended for wool fabrics.

Low Heat ☼
- **Low temperature** drying programme recommended for mixed fabrics (synthetics/cotton) synthetic fabrics.

High Heat ☼☼
- **High temperature** drying programme recommended for cotton, terry toweling, linen, hemp fabrics, etc....

- Select the degree of dryness that you require:

☼ **EXTRA DRY**
(suitable for towels, bathrobes and bulky loads).

 **IRON DRY**
(that leaves the laundry ready for ironing).

 **CUPBOARD DRY**
(for items that will be put away without ironing).

- If you wish to select a **timed drying** programme, press the **DRYING SELECTION** button until the required time indicator lights up.

By selecting the wool drying programme, it's not possible to select a degree of dryness different from the default one.

- The washer dryer will calculate the time needed for drying and the level of moisture remaining in the laundry, according to the load and drying type selected.

- Check that the tap is turned on and that the discharge hose is positioned correctly.

WARNING:
Do not dry articles with special padding (e.g. quilts, quilted anoraks, etc.) and very delicate fabrics.
If garments are drip/dry, load less items to prevent creasing.

- Press the **START/PAUSE** button (the display will show the drying time remaining).

The appliance calculates the time to the end of the selected programme based upon a standard loading.
During the cycle, the appliance corrects the time according to the size and composition of the load.

During the drying phase the drum will accelerate to a higher speed to distribute the load and to optimize the drying performance.

- The drying programme indicator will be on, until the cool down phase begins and the corresponding indicator is on.

- When the programme is finished the word **"End"** will appear on the display. After **5 minutes** the appliance will go into standby mode (on certain models, the display will show two lines).

- Switch off the machine by turning the programme selector to the **OFF** position.

- Open the door and remove the laundry.

- Turn off the tap.

CANCELLING THE DRYING PROGRAMME

- To cancel the drying programme, press and hold the **DRYING SELECTION** button for about **3 seconds**.

WARNING:
After cancelling the drying programme, the cool down phase will begin and you must wait for about 10/20 minutes before opening the door.

In order to ensure the correct operation of the appliance, it is advisable not to interrupt the drying phase unless it is absolutely necessary.

8. AUTOMATIC WASHING/DRYING CYCLE

You cannot exceed the maximum dryable load of laundry indicated in the programme table, otherwise the laundry will not be dried satisfactory.

- Washing

- Open the drawer and put in the correct amount of detergent.
- Refer to the list of washing programmes for the fabrics to be washed (e.g. very dirty cotton) and turn the selector knob to the required programme.
- Adjust the wash temperature if necessary.
- Press the option buttons (if required).
- Check that the tap is turned on and that the discharge hose is positioned correctly.

- Drying

- Select the degree of dryness that you require:

EXTRA DRY
(suitable for towels, bathrobes and bulky loads).

IRON DRY
(that leaves the laundry ready for ironing).

CUPBOARD DRY
(for items that will be put away without ironing).

By selecting the wool programme, only the default degree of dryness is available.

- If you wish to select a **timed drying** programme, press the **DRYING SELECTION** button until the required time indicator lights up.
- Press the **START/PAUSE** button.
- At the end of the wash phase the display will show the drying time remaining.
- The drying programme indicator will be on, until the cool down phase begins and the corresponding indicator is on.
- When the programme is finished the word **"End"** will appear on the display. After **5 minutes** the appliance will go into standby mode (on certain models, the display will show two lines).
- Switch off the machine by turning the programme selector to the **OFF** position.
- Open the door and remove the laundry.
- Turn off the tap.

CANCELLING THE DRYING PROGRAMME

- To cancel the drying programme, press and hold the **DRYING SELECTION** button for about **3 seconds**.

WARNING:
After cancelling the drying programme, the cool down phase will begin and you must wait for about 10/20 minutes before opening the door.

In order to ensure the correct operation of the appliance, it is advisable not to interrupt the drying phase unless it is absolutely necessary.

9. THROUBLESHOOTING AND WARRANTY

If you believe the washing machine is not working correctly, consult the quick guide provided below which includes some practical tips on how to fix the most common problems.

ERROR CODE FORMAT

- **Models with a display:** the error is shown by a number preceded by the letter "E" (example: E2 = Error 2).
- **Models without display:** an error is shown by a sequence of flashes of every LED. The error code is shown by the number of flashes followed by a pause of 5 seconds (example: two flashes – pause 5 seconds – two flashes – repeating = Error 2).

Error shown	Possible causes and practical solutions
E2 *(with display)* ***2 flashes of the LEDs*** *(without display)*	**The machine cannot load water.**
	Make sure the water supply tap is open.
	Make sure the water supply hose isn't bent, kinked or trapped.
	Make sure the drain pipe is at the proper height (see installation section).
	Close the water supply tap, unscrew the filler hose from the back of the washing machine and make sure the "anti-sand" filter is clean and not blocked.
E3 *(with display)* ***3 flashes of the LEDs*** *(without display)*	**The washing machine does not drain water.**
	Make sure the filter is not clogged.
	Make sure the drain hose isn't bent, kinked or trapped.
	Make sure the home drainage system is not blocked and is allowing water to flow through without obstruction. Try to drain the water in the sink.
E4 *(with display)* ***4 flashes of the LEDs*** *(without display)*	**There is too much foam and/or water.**
	Ensure the correct amount of detergent is being used and the detergent is designed for use in a washing machine.
E7 *(with display)* ***7 flashes of the LEDs*** *(without display)*	**Door problem.**
	Make sure the door is correctly closed. Make sure the clothes inside the drum are not preventing the door from closing fully.
	If the door is locked, turn off and unplug the washing machine from the electrical supply socket, wait 2-3 minutes and reopen the door.
Any other code	Turn off and unplug the washing machine, wait a minute. Turn on the machine and restart a program. If the error occurs again contact an Authorised Customer Service Centre directly.

OTHER ANOMALIES

Problem	Possible causes and practical solutions
The washing machine does not work / start	Make sure the product is plugged into a working supply socket.
	Make sure power is on.
	Make sure the wall socket is working, testing it with another appliance such as a lamp.
	The door may not be correctly closed: open and close it again.
	Check whether the required program was correctly selected and the start button pressed.
	Make sure the washing machine is not in pause or time delay mode.
Water leaked on the floor near the washing machine	This may be due to a leak from the seal between the tap, supply hose and fill valve; in this case, replace it and tighten the hose connections correctly.
	Make sure the front filter is correctly closed.
The washing machine does not spin	The machine is fitted with a detection system that protects the load and product from damage if the load is not balanced before spinning. This may result in:- • The machine attempts to balance the load, increasing the time of spin. • Reduction of the speed of spin to decrease vibrations and noise. • The spin cycle aborting to protect the machine and load. If this is experienced remove the load de-tangle it, reload it and restart the spin program.
	This could be due to the fact that water has not been completely drained: wait a few minutes. If the problem persists, see Error 3 section.
	Some models include a "no spin" function: make sure it is not selected.
	Check which options are selected and their effect on the spin cycle.
	Excessive detergent can impede the spin cycle, ensure the correct amount of detergent is being used.
Strong vibrations / noises are heard during the spin cycle	The washing machine may not be fully levelled: if necessary, adjust the feet as indicated in the specific section.
	Make sure transport screws, rubber bungs and spacer tubes were removed.
	Make sure there are no foreign objects inside the drum (coins, hinges, buttons, etc…).

The standard manufacturer warranty covers faults caused by electrical or mechanical faults in the product due to an act or omission of the manufacturer. If a fault is found to be caused by factors outside the product supplied, miss-use or as a result of the instructions on use not being followed, a charge may be applied.

The use of ecological detergents without phosphates may cause the following effects:

- **cloudier rinse drain water**: This effect is tied to the suspended zeolites which do not have negative effects on rinse efficiency.

- **white powder (zeolites) on laundry at the end of the wash**: this is normal, the powder is not absorbed by fabric and does not change its colour.
  To remove the zeolites, select a rinse programme. In the future consider using slightly less detergent.

- **foam in the water at last rinse**: this does not necessary indicate poor rinsing. Consider using less detergent in future washes.

- **abundant foam**: This is often due to the anionic surfactants found in the detergents which are hard to eliminate from laundry.
  In this case, do not re-rinse to eliminate these effects: it will not help at all.
  We suggest conducting a maintenance wash using a proprietary cleaner.

If the problem persists or if you suspect a malfunction, immediately contact an Authorised Customer Service Centre.

It is always recommended to use original spare parts, that are available at our Authorised Customer Service Centres.

Warranty
The product is guaranteed under the terms and conditions stated on the certificate included with the product. The certificate has to be stored so as to be shown to the Authorized Customer Service Centre in case of need. You can also check the warranty conditions on our web site. To obtain assistance, please fill in the form on-line or contact us at the number indicated on the support page of our web site.

The manufacturer declines all responsibility for any printing errors in the booklet included with this product. Moreover, it also reserves the right to make any changes deemed useful to its products without changing their essential characteristics.

WIRELESS PARAMETERS

(for model with Wi-Fi function)

Parameter	Specifications
Wireless Standard	802.11 b/g/n
Frequency range	2.412 GHz. - 2.484 GHz.
Max Trasmit Power	802.11b (11Mbps) +18,5 ± 2 dBm 802.11g (54Mbps) +16 ± 2 dBm 802.11n (HT20, MCS7) +14 ± 2 dBm
Minimum Receiving Sensitivity	802.11b (11Mbps) -93 dBm 802.11g (54Mbps) -85 dBm 802.11n (HT20, MCS7) -82 dBm

With this the Candy Hoover Group Srl, declares that this appliance marked with CE complies with the essential requirements of the Directive 2014/53/EU. To receive a copy of the declaration of conformity, please contact the manufacturer at: www.candy-group.com

WIRELESS PARAMETERS

(for model with NFC function)

Parameter	Specifications
Wireless Standard	ISO/IEC 14443 Type A and NFC Forum Type 4
Frequency band	13.553-13.567 MHz (centre frequency 13.560 MHz)
Magnetic field limit	< 42dBµA/m (at 10 meters)

With this the Candy Hoover Group Srl, declares that this appliance marked with CE complies with the essential requirements of the Directive 2014/53/EU. To receive a copy of the declaration of conformity, please contact the manufacturer at: www.candy-group.com

18.04 - 43024254 - Canon Italia - Business Services Channel