We advise you to read this manual carefully, which contains all the instructions for maintaining the appliance's aesthetic and functional qualities. For further information on the product: www.smeg.com

EN

PRECAUTIONS

General safety instructions

Risk of personal injury

- ATTENTION: during use, the appliance and its accessible parts become very hot. Children must be kept away from the appliance.
- ATTENTION: during use, the appliance and its accessible parts become very hot. Never touch the heating elements during use.
- Protect your hands by wearing oven gloves when moving food inside the oven.
- Never try to put out a fire or flames with water: turn off the appliance and smother the flames with a fire blanket or other appropriate cover.
- This appliance may be used by children aged at least 8 and by people of reduced physical, sensory or mental capacity, or lacking in experience in the use of electrical appliances, provided that they are supervised or instructed by adults who are responsible for their safety.
- Children must not play with the appliance.
- Keep children under the age of 8 at a safe distance unless they are constantly supervised.
- Keep children under the age of 8 away from the appliance when it is in use.
- Cleaning and maintenance must not be carried out by unsupervised children.
- The cooking process must always be monitored. A short cooking process must be continuously surveyed.
- Never leave the appliance unattended during cooking operations where fats or oils could be released, as these could then heat up and catch fire. Be very careful.
- Do not pour water directly onto very hot trays.
- Keep the oven door closed during cooking.
- If you need to move food or at the end of cooking, open the door 5 cm for a few seconds, let the steam come out, then open it fully.
- Do not insert pointed metal objects (cutlery or utensils) into the slots in the appliance.
- Switch off the appliance

immediately after use.
- DO NOT USE OR STORE FLAMMABLE MATERIALS NEAR THE APPLIANCE.
- DO NOT USE AEROSOLS IN THE VICINITY OF THIS APPLIANCE WHILST IT IS IN USE.
- DO NOT MODIFY THIS APPLIANCE.
- Installation and servicing should be carried out by qualified personnel in accordance with current standards.
- Do not try to repair the appliance yourself or without the assistance of a qualified technician.
- Do not pull the cable to unplug the appliance.

Risk of damaging the appliance

- Do not use abrasive or corrosive detergents (e.g. scouring powders, stain removers and metallic sponges), rough or abrasive materials or sharp metal scrapers on glass parts as this could cause scratch the surface and break the glass. Use wooden or plastic utensils.
- Do not sit on the appliance.
- Do not use cleaning products containing chlorine, ammonia or bleach on parts made of steel or that have metallic surface finishes (e.g. anodizing, nickel- or chromium-plating).
- Racks and trays should be inserted as far as they will go into the side guides. The mechanical safety locks that prevent them from being removed must face downwards and towards the back of the oven cavity.

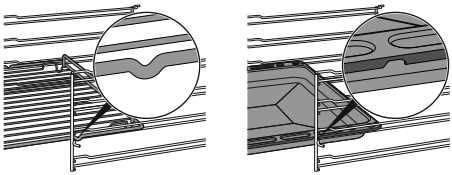

- Do not use steam jets to clean the appliance.
- Do not spray any spray product near the appliance.
- Do not obstruct ventilation openings and heat dispersal slots.
- Fire hazard: never leave objects in the oven cavity.
- DO NOT FOR ANY REASON USE THE APPLIANCE AS A SPACE HEATER.
- Do not use plastic cookware or containers when cooking food.
- Do not place sealed tins or containers in the oven cavity.
- Remove all trays and racks which are not required during cooking.
- Do not cover the bottom of the oven cavity with aluminium or tin foil sheets.
- Do not place pans or trays directly on the bottom of the oven cavity.

- If necessary, you can use the tray rack (supplied or sold separately, depending on the model) by placing it on the bottom as a support for cooking.
- If you wish to use greaseproof paper, place it so that it will not interfere with the hot air circulation inside the oven cavity.
- Do not use the open door to rest pans or trays on the internal glass pane.
- Never use the oven door to lever the appliance into place when fitting.
- Avoid exerting too much pressure on the door when open.
- Do not use the handle to lift or move this appliance.

For pyrolytic appliances

- When the pyrolitic function is in use, the surfaces could reach temperatures that are higher than usual. Keep children at a safe distance.
- Before starting the pyrolytic cycle, remove any food residues or large spills from previous cooking operations from the inside of the oven.
- Before starting the pyrolytic cycle, remove all accessories from the oven cavity.
- Before starting the pyrolytic cycle, switch off the burners or electric hot plates of the hob installed above the oven.

Installation and maintenance

- THIS APPLIANCE MUST NOT BE INSTALLED IN A BOAT OR CARAVAN.
- The appliance must not be installed on a base.
- Position the appliance into the cabinet cut-out with the help of a second person.
- To prevent any possible overheating, the appliance should not be installed behind a decoration door or a panel.
- Installation and servicing should be carried out by qualified personnel in accordance with current standards.
- Have the electrical connection performed by authorised technical personnel.
- The appliance must be connected to earth in compliance with electrical system safety standards.
- Use cables withstanding a temperature of at least 90 °C.
- The tightening torque of the screws of the terminal supply wires must be 1.5 - 2 Nm.
- If the power cable becomes damaged, contact technical support immediately to arrange for it to be replaced in order to avoid possible

hazards.
- WARNING: while positioning the appliance, make sure that the power supply cable is not caught or damaged.
- Always use any necessary/ required personal protective equipment (PPE) before performing any work on the appliance (installation, maintenance, positioning or movement).
- Before performing any work on the appliance, switch off the power supply.
- Allow the appliance to be disconnected after installation, via an accessible plug or a switch in the case of a fixed connection.
- Fit the power line with an all-pole circuit breaker with a contact separation distance sufficient to provide complete disconnection in category III overvoltage conditions, pursuant to installation regulations.
- WARNING: Make sure that the appliance has been switched off and disconnected from the mains power supply or that the mains power has been switched off before replacing the interior lighting bulbs.
- The bulbs used in this appliance are specific for household appliances; do not use them for home lighting.
- This appliance can be used up to a maximum altitude of 4,000 metres above sea level.

For this appliance

- Do not rest any weight or sit on the open door of the appliance.
- Take care that no objects are stuck in the doors.
- Do not install/use the appliance outdoors.
- Only use the temperature probe provided or recommended by the manufacturer (on some models only).

Appliance purpose

This appliance is intended for cooking food in the home environment. Every other use is considered improper. It must also not be used:

- In kitchen areas provided for employees in shops, offices and other work environments.
- in farms/farmhouses.
- By guests in hotels, motels and other types of residential environments.
- In bed and breakfasts.



This appliance may only be installed and used indoors.

This user manual

- This user manual is an integral part of

the appliance and must therefore be kept in its entirety and within the user's reach for the whole working life of the appliance.
- Read this user manual carefully before using the appliance.
- The explanations in this manual include images, which describe all that regularly appears on the display. However, it should be kept in mind that the appliance may be equipped with an updated version of the system, and as such, all that appears on the display may differ from those in the manual.

Manufacturer's liability

The manufacturer declines all liability for damage to persons or property caused by:
- use of the appliance other than that specified;
- failure to comply with the instructions in the user manual;
- tampering with any part of the appliance;
- use of non-original spare parts.

Identification plate

The identification plate bears the technical data, serial number and brand name of the appliance. Do not remove the identification plate for any reason.

Disposal

This appliance conforms to the WEEE European directive (2012/19/EU) and must be disposed of separately from other waste at the end of its service life.

The appliance does not contain substances in quantities sufficient to be considered hazardous to health and the environment, in accordance with current European directives.

Power voltage
Danger of electrocution

- Disconnect the mains power supply.
- Unplug the appliance.

To dispose of the appliance:
- Cut the power cable and remove it.
- Deliver the appliance to the appropriate recycling centre for electrical and electronic equipment waste, or return it to the retailer when purchasing an equivalent product, on a one for one basis.

Our appliances are packaged in non-polluting and recyclable materials.
- Deliver the packing materials to the appropriate recycling centre.

Plastic packaging
Danger of suffocation

- Do not leave the packaging or any part of it unattended.
- Do not let children play with the plastic bags.

Information for European Control Bodies

Fan forced mode

the ECO function used to define the energy efficiency class complies with the specifications of European standard EN 60350-1.

Energy efficiency technical data

Information in accordance with the European energy labelling and ecodesign regulations is contained in a separate document accompanying the product instructions.

These data are present in the "Product information sheet" that can be downloaded from the website at the page dedicated to the product in question.

To save energy

- Only preheat the appliance if the recipe requires you to do so.
- Unless otherwise indicated on the package, defrost frozen foods before placing them in the oven.
- When cooking several types of food it is recommended to cook the foods one after the other to make the best use of the already hot oven.
- Use dark metal moulds: They help to absorb the heat better.
- Remove all trays and racks which are not required during cooking.
- Stop cooking a few minutes before the time normally used. Cooking will continue for the remaining minutes with the heat which has accumulated inside the oven.
- Reduce any opening of the door to a minimum to avoid heat dispersal.
- Keep the inside of the oven clean at all times.

Information on power consumption in off/stand-by mode

Technical data on the appliance's power

consumption in off/stand-by mode can be found at www.smeg.com under the page corresponding to the product in question.

Light sources

- This appliance contains user-replaceable light sources.

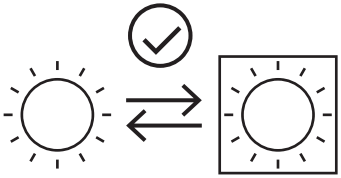

- The light sources contained in the appliance are declared suitable for operation at ambient temperature ≥300°C and intended for use in high temperature applications such as ovens.
- This appliance contains light sources of efficiency class "G".

How to read the user manual

This user manual uses the following reading conventions:

	Warning/Caution
	Information/Advice

DESCRIPTION

General description

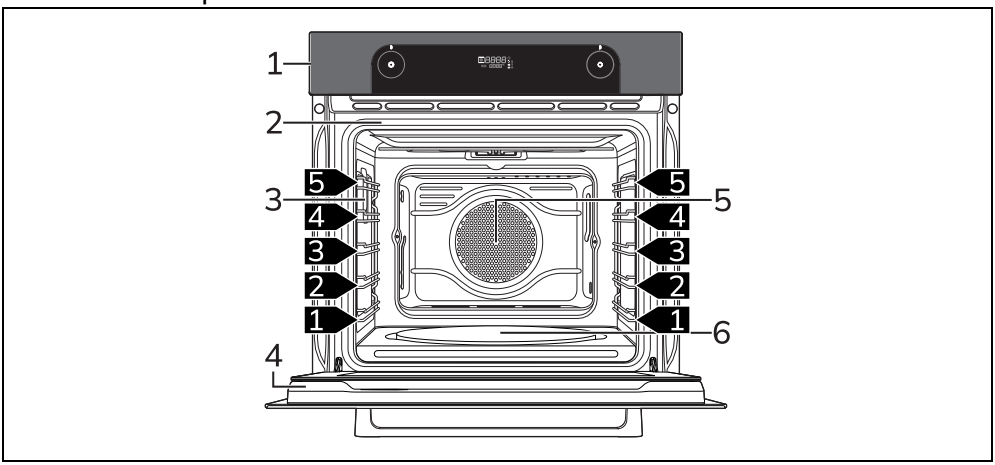

1 Control panel
2 Gasket
3 Light
4 Door
5 Fan
6 Pizza stone
1,2,3.. Frame shelf

Control panel

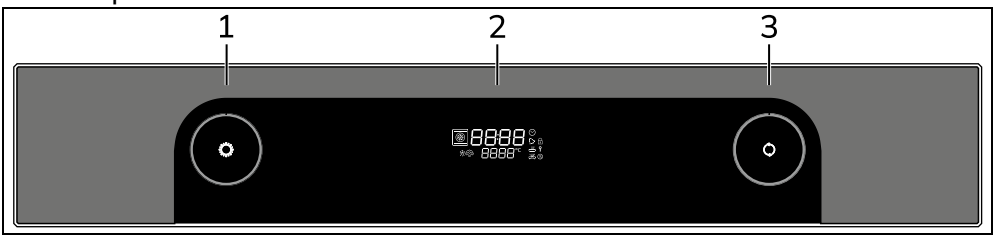

1 Function knob

This knob can be used to:

- turn the appliance on and off;

- select a function.

Turn the Function knob to the position 0 to immediately complete any cooking operation.

2 Digital programmer

Displays the current time, the minute minder, the function, the power and the selected cooking temperature and any time set.

3 Temperature knob

This knob can be used to set:
- the cooking temperature;
- the duration of a function;
- programmed cooking cycles;
- the current time.

Other parts

Shelves

The appliance features shelves to position trays and racks at different heights. The insertion heights are indicated from the bottom upwards.

Cooling fan

The fan cools the appliance and comes into operation during cooking.
The fan causes a steady outflow of air from above the door which may continue for a short period of time even after the appliance has been turned off.

Oven cavity lighting

- The lighting of the oven cavity is activated when any cooking function is selected, excluding the ECO function.
- The interior lighting remains switched off during the execution of the dEFr - PrOu - SAbb special functions and the CLEA - PYro cleaning functions (depending on the models).
- When the door is opened, excluding the SAbb function, the lighting in the oven cavity is switched on. It switches off immediately when the door is closed.
- When the door is open, it is not possible to turn off the interior lighting.

Accessories

Not all accessories are available on some models.

The accessories intended to come into contact with food are made of materials that comply with the provisions of current legislation.

Original supplied and optional accessories can be requested to Authorised Assistance Centres. Use only original accessories supplied by the manufacturer.

Rack

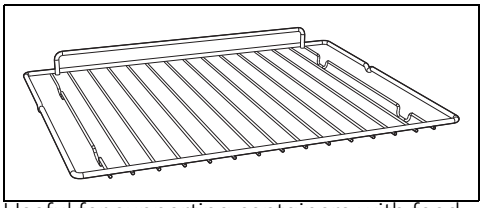

Useful for supporting containers with food during cooking.

Deep tray

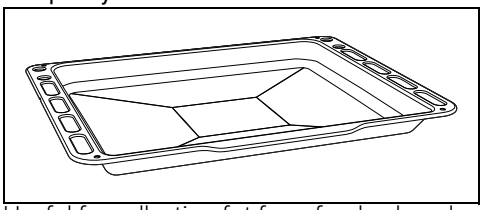

Useful for collecting fat from foods placed on the rack above and for cooking pies, pizzas, baked desserts, biscuits, etc.

Pizza stone

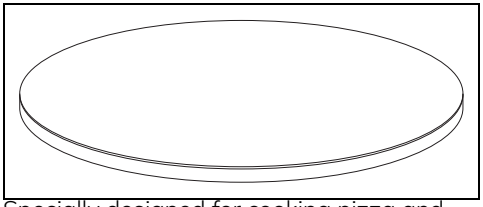

Specially designed for cooking pizza and similar dishes.

EN

Pizza cover

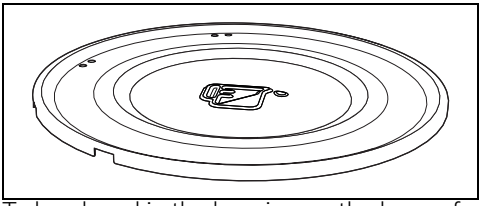

To be placed in the housing on the base of the oven in place of the pizza stone when this is not being used.

Optional accessories (can be purchased separately)

Pizza spatula

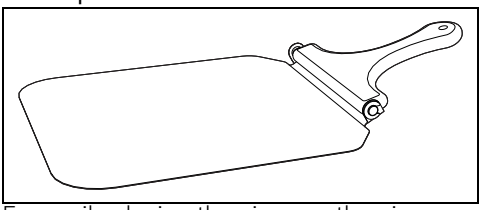

For easily placing the pizza on the pizza stone.

Tray rack

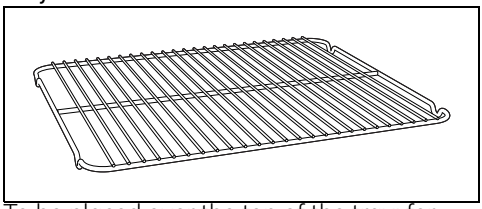

To be placed over the top of the tray; for cooking foods which may drip.

Tray

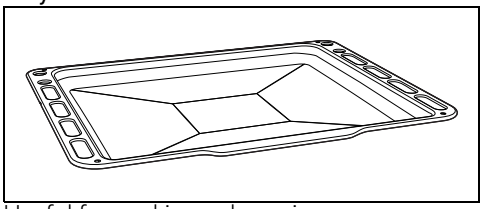

Useful for cooking cakes, pizzas, oven-baked desserts and biscuits.

USE

Preliminary operations

See General safety instructions.

- Remove any protective film from the outside or inside of the appliance, including accessories.
- Remove any labels (apart from the technical data plate) from the accessories and shelves.
- Remove and wash all the appliance accessories (see chapter "CLEANING AND MAINTENANCE").

First heating

1. Set a cooking time of at least one hour (see paragraph "Using the oven").
2. Heat the empty oven compartment at the maximum temperature to burn off any residues left by the manufacturing process.

When heating the appliance

- air the room;
- don't stay.

Using the accessories

Racks and trays

Racks and trays have to be inserted into the side guides until they come to a complete stop.

- The mechanical safety locks that prevent the rack from being removed accidentally must face downwards and towards the back of the oven cavity.

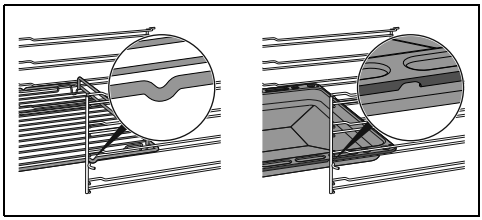

Gently insert racks and trays into the oven until they come to a stop.

Clean the trays before using them for the first time to remove any residues left by the manufacturing process.

Tray rack

The tray rack has to be inserted into the tray. In this way fat can be collected separately from the food which is being

cooked.

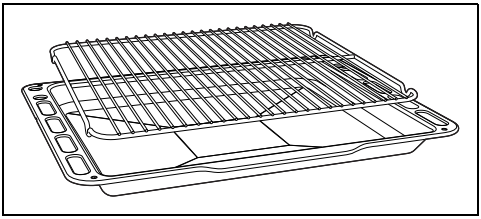

Pizza cover and Pizza stone (on selected models only)

Improper use
Danger of burns and damage to surfaces

- The pizza cover and pizza stone remain hot even several minutes after cooking is finished. Ensure it is handled with due caution.
- Do not use the pizza stone other than as described, for example do not use it on gas or glass ceramic hobs or in ovens which are not designed for this purpose.
- If you like oil on your pizza, it is best to add it after removal from the oven since oil stains on the pizza stone are unsightly and may reduce its efficiency.
- If the pizza stone is not in use, remove it from the oven and cover the bottom of the oven with the pizza cover provided.

With the appliance cold, remove the pizza cover from the bottom and insert the pizza stone. Make sure that the stone is inserted correctly in the recess provided.
For cooking use the special pizza function.

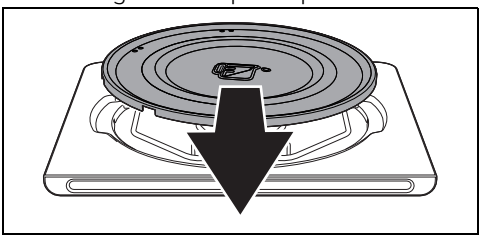

Pizza spatula (on selected models only)
Always grip the pizza spatula by the handle when moving food to avoid the risk of burns. You are advised to dust the steel surface lightly with flour to make it easier to slide fresh products on and off, as they could stick to the steel due to their moisture content.

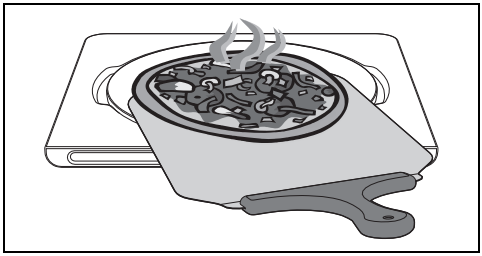

Using the oven

See General safety instructions.

Digital programmer



The parameters and values for the currently selected function will be indicated on the display. To use it, just turn the function and temperature knobs to select the indicated values.

- Clock indicator light
- Minute minder indicator light
- Cooking indicator light
- Programmed cooking indicator light
- Control lock indicator light
- Showroom indicator light
- Defrost indicator light
- Temperature indicator light
- Steam indicator light

First use

If the time is not set, the oven will not switch on.

On the first use, or after a long power failure, the message 0:00 will flash on the appliance's display. To be able to start any cooking function, the current time must be set.

1. Turn the temperature knob to select the current time.

EN

2. Press the temperature knob to set the current time and go to the selection of minutes.
3. Turn the temperature knob to select the minutes of the current time.
4. Press the temperature knob to finish adjustment.

It may become necessary to change the current time, for example for daylight saving time.

When the current time is visible, after 2 minutes from the last knob operation it is displayed with low brightness.

Using the oven

See General safety instructions.

Traditional cooking

Cooking functions can be interrupted at any time by turning the function knob to the 0 position.

1. Turn the function knob to the right or to the left to select the wished function (for example "FAN-ASSISTED ").
2. Turn the temperature knob to the right or to the left to select the wished temperature (for example "200°C").

Wait 3 seconds (or press the temperature knob before waiting 3 seconds) to start cooking.

After having started cooking, press the temperature knob to enter any setting of cooking duration, cooking end time...



When the door is opened, the function in progress is interrupted. The function resumes automatically when the door is closed.

Preheating stage

Cooking itself is preceded by a preheating stage, which allows the appliance to heat to the cooking temperature more quickly.

The indicator light  flashes to indicate that this stage is in progress.

You can skip the preheating phase by pressing the temperature knob for a few seconds.

At the end of preheating the indicator light  will stay on permanently, the symbol of the oven cavity  flashes and a buzzer sounds.

1. Open the door
2. Place the dish with the food to be cooked into the oven cavity.
3. Close the door.

or

If the dish with the food is already inside the oven cavity, press the temperature knob to start cooking.

Timed cooking

Timed cooking is the function which allows a cooking operation to be started and then ended after a specific length of time set by the user.

Activation of timed cooking cancels any minute minder timer which may previously have been set.

1. After selecting a cooking function and temperature, press the temperature knob.

The display shows  flashing.

2. Within 3 seconds turn the temperature knob to change the temperature

or

3. Press the temperature knob to set the cooking time (from 1 minute to 13 hours) (e.g. "25 minutes").



4. Wait 3 seconds.

The indicator light stops flashing, the symbol lights up and timed cooking begins.

At the end of the cooking time STOP flashes on the display and a buzzer will sound that can be deactivated by opening the door and/or pressing/turning any of the two knobs.



To select a further timed cooking, turn again the temperature knob.

To delete a timed cooking

1. Press the temperature knob.

The indicator light flashes on the display.

2. Within 3 seconds, turn the temperature knob counter-clockwise until the cooking time is reset.
3. Wait 3 seconds or press the temperature knob to exit the timed cooking function and return to the current time display.

Programmed cooking

Programmed cooking is the function which allows a cooking operation to be started at a set time and then ended after a specific length of time set by the user.

For safety reasons, it is not possible to set the end of cooking time by itself without setting the cooking duration.

1. After selecting a cooking function and temperature, press the temperature knob.

The display shows 00:00 flashing.



2. Within 3 seconds turn the temperature knob to set the cooking time (from 1 minute to 13 hours) (e.g. "25 minutes").



3. Press the temperature knob.

The display shows the suggested flashing time for immediate cooking.

In case of confirmation without modification, cooking starts immediately. If time is added to the suggested time, cooking stops.

4. Turn the temperature knob within 3 seconds to set the end of cooking time (e.g. "13:15").



5. Wait 3 seconds.

The indicator light and the appliance waits for the set start time.



The minutes required for pre-heating are already included in the end-of-cooking time.

At the end of the cooking time STOP flashes on the display and a buzzer will sound that can be deactivated by opening the door and/or pressing/turning any of the two knobs.



EN

How to cancel programmed cooking

1. Press the temperature knob.

The indicator light flashes on the display.

2. Within 3 seconds, turn the temperature knob clockwise or counter-clockwise to set a new timed cooking.

The set cooking has now been deleted.

Cooking functions can be interrupted at any time by turning the function knob to the 0 position.

Direct Steam cooking

Do not place food or any other object directly on the bottom of the oven. The base of the oven and the pizza cover must always be left free.

1. Open the oven door.
2. Fill the pizza cover with sufficient water for the cooking duration.

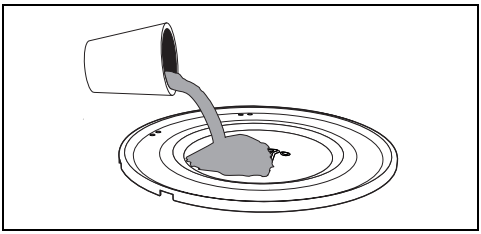

Use cold tap water which is not too hard, softened water or still mineral water.

Do not use distilled water, tap water with a high chloride content (> 40 mg/l), or other liquids.

The maximum capacity of the pizza cover is 300 ml.

3. Place the food on the oven tray.
4. Place the tray with the food in the oven.
5. Select a cooking function (e.g. “BASE”).
6. Select the cooking temperature and time using the appropriate knobs.

For best results and to save energy, it is recommended to fill the pizza cover with sufficient water for the required cooking.

End of Direct Steam cooking

1. Stand to the side of the appliance and open the door ajar for a few seconds to allow excess steam to escape.
2. Fully open the door when safe to do so and cautiously remove the food from the oven.
3. Wait for the appliance to cool down completely before cleaning it.

The pizza cover may be very hot: use appropriate protection.

If cooking has just been carried out with temperatures greater than 100°C, you must wait for the oven to cool in order to use the Direct Steam function.

4. Remove any remaining water inside the oven cavity and dry thoroughly.
5. Use a sponge to remove any condensation from the base and walls of the oven cavity, the door glass and the drip tray at the front of the appliance.

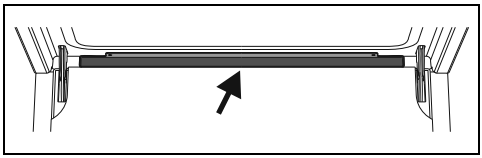

Take care: the water may be very hot.

Minute minder timer during a cooking process

The minute minder timer does not stop the cooking operation but rather informs the user when the set time has run out.

It is not possible to set a minute minder during a cooking if a timed cooking has already been set.

1. After selecting a cooking function and temperature, press the temperature knob two times.

The display shows 00:00 and the

indicator light flashes.

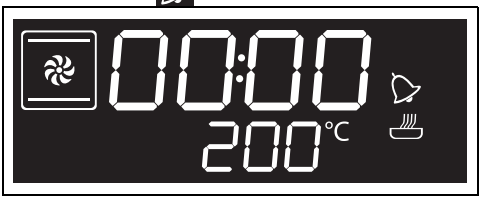

You can also set a minute minder timer also when cooking is in progress.

2. Within 3 seconds turn the temperature knob to set the duration of the minute minder (from 1 minute to 13 hours).
3. Wait 3 seconds.

The indicator light stops flashing and the minute minder starts.

4. Wait for the buzzer to indicate that the time has finished.

The digits 00:00 and the indicator light flash.

5. Turn the temperature knob to select additional minute minders or press the temperature knob to deactivate the buzzer and exit the minute minder during cooking.

After a few seconds, the display shows the current time and the cooking in progress continues.

To delete a minute minder timer during cooking

1. During cooking, press the temperature knob twice.

The indicator light flashes on the display.

2. Within 3 seconds, turn the temperature knob counter-clockwise until the minute minder value is reset.
3. Wait 3 seconds to exit the minute minder function during cooking.

List of traditional cooking functions

Not all functions are available on some models.

STATIC

Traditional cooking, ideal for preparing a single dish. For example cooking roast meats, fatty meats, bread, pies.

FAN ASSISTED

Intense and uniform cooking. Ideal for biscuits, cakes and cooking on more than one level.

CIRCULAIRE

The heat is distributed quickly and uniformly. Suitable for all dishes, ideal for cooking on multiple levels without mixing smells or flavours.

GRILL

Produces excellent grilling and gratinating results. When used at the end of cooking, gives a uniform browning to dishes.

FAN WITH GRILL

Allows optimal grilling, even for thick slices of meat. Perfect for larger cuts of meat.

BOTTOM HEAT

The heat comes from the bottom of the cavity. Perfect for cakes, pies, tarts and pizzas.

PIZZA

Function designed for cooking pizza. Perfect not just for pizzas, but also for biscuits and cakes.

ECO

ECO

This function is particularly suitable for cooking on a single shelf with low energy consumption.
It is recommended for all types of food except those that may produce a large amount of moisture (e.g. vegetables).
To obtain maximum energy savings and reduce cooking times, it is recommended to place food in the oven without preheating.

When using the ECO function, avoid opening the door during cooking.

Cooking (and preheating) times are longer with the ECO function and may depend on the amount of food in the oven.

EN



The ECO function is a delicate cooking function and is recommended for cooking that does not require temperatures higher than 210°C. It is recommended that you select a different function for cooking at higher temperatures.

Cooking advice

General advice

- Use a fan assisted function to achieve consistent cooking at several levels.
- It is not possible to shorten cooking times by increasing the temperature (the food could be overcooked on the outside and undercooked on the inside).

Advice for cooking meat

- Cooking times vary according to the thickness and quality of the food and to consumer taste.
- Use a meat thermometer when roasting meat, or simply press on the roast with a spoon. If it is hard, it is ready; If not, it needs another few minutes cooking.

Advice for cooking with the Grill and the Fan with grill

- Meat can be grilled even when it is put into the cold oven or into the preheated oven if you wish to change the effect of the cooking.
- When using the fan-assisted with grill function, we recommend that you preheat the oven before grilling.
- We recommend placing the food at the centre of the rack.
- With the Grill function, we recommend that you set the temperature to the maximum value to optimise cooking.

Advice for cooking desserts/pastries and biscuits

- Use dark metal moulds: They help to absorb the heat better.
- The temperature and the cooking time depend on the quality and consistency of the dough.
- To check whether the dessert is cooked right through: At the end of the cooking time, put a toothpick into the highest point of the dessert. If the dough does not stick to the toothpick, the dessert is cooked.
- If the dessert collapses when it comes out of the oven, on the next occasion reduce the set temperature by about 10°C, selecting a longer cooking time if necessary.

Advice for defrosting and proving

- Place frozen foods without their packaging in a lidless container on the first shelf of the oven.
- Avoid overlapping the food.
- To defrost meat, use the rack placed on the second level and a tray on the first level. In this way, the liquid from the defrosting food drains away from the food.
- The most delicate parts can be covered with aluminium foil.
- For successful proving, a container of water should be placed in the bottom of the oven.

To save energy

- Stop cooking a few minutes before the time normally used. Cooking will continue for the remaining minutes with the heat which has accumulated inside the oven.
- Reduce any opening of the door to a minimum to avoid heat dispersal.
- Keep the inside of the appliance clean at all times.

Mini guide to accessories

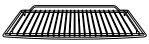

Rack

We recommend the use of the grill as a support surface for baking moulds/casseroles.

In the absence of the baking tray grill, the grill can be used as a base for grilling with the deep baking tray placed on a shelf below to collect the juices.

For multilevel baking, place two grills leaving one free shelf between them. Use the THERMALLY-VENTILATED  and/or THERMALLY-VENTILATED BASE function .



Deep tray

We recommend the use of the deep baking tray for cooking on one level only.

Place the deep baking tray on the centre shelf when using the fan-assisted functions.

When using the STATIC function,  place the deep baking tray on the required shelf.

Place the baking tray on the last shelf with the baking tray grill to cook in GRILL mode .



Tray rack

We recommend using the baking tray grill as a base to collect the juices from the grills.

Traditional cooking information table

Food	Weight (kg)	Function	Shelf	Temperature (°C)	Time (minutes)	
Lasagne	3 - 4	Static	1	220 - 230	45 - 50	
Pasta bake	3 - 4	Static	1	220 - 230	45 - 50	
Veal roast	2	Turbo/Fan-assisted	2	180 - 190	90 - 100	
Pork loin	2	Turbo/Fan-assisted	2	180 - 190	70 - 80	
Sausages	1.5	Fan-assisted grill	4	250	15	
Roast beef	1	Turbo/Fan-assisted	2	200	40 - 45	
Roast rabbit	1.5	Fan-assisted/Fan-Heated	2	180 - 190	70 - 80	
Turkey breast	3	Turbo/Fan-assisted	2	180 - 190	110 - 120	
Roast pork neck	2 - 3	Turbo/Fan-assisted	2	180 - 190	170 - 180	
Roast chicken	1.2	Turbo/Fan-assisted	2	180 - 190	65 - 70	
					1st surface	2nd surface
Pork chops	1.5	Fan-assisted grill	4	250	15	5
Spare ribs	1.5	Fan-assisted grill	4	250	10	10
Bacon	0.7	Grill	5	250	7	8
Pork fillet	1.5	Fan-assisted grill	4	250	10	5
Beef fillet	1	Grill	5	250	10	7
Salmon trout	1.2	Turbo/Fan-assisted	2	150 - 160	35 - 40	
Monkfish	1.5	Turbo/Fan-assisted	2	160	60 - 65	
Flounder	1.5	Turbo/Fan-assisted	2	160	45 - 50	

The times indicated in the table do not include preheating times and are provided only as a guide.

Food	Weight (kg)	Function	Shelf	Temperature (°C)	Time (minutes)
Pizza	1	Turbo/Fan-assisted	2	250	8 - 9
Bread	1	Fan-assisted/Fan-Heated	2	190 - 200	25 - 30
Focaccia	1	Turbo/Fan-assisted	2	180 - 190	20 - 25
Bundt cake	1	Fan-assisted/Fan-Heated	2	160	55 - 60
Tart	1	Fan-assisted/Fan-Heated	2	160	35 - 40
Ricotta cake	1	Fan-assisted/Fan-Heated	2	160 - 170	55 - 60
Jam tarts	1	Turbo/Fan-assisted	2	160	20 - 25
Chiffon cake	1.2	Fan-assisted/Fan-Heated	2	160	55 - 60
Profiteroles	1.2	Turbo/Fan-assisted	2	180	80 - 90
Sponge cake	1	Fan-assisted/Fan-Heated	2	150 - 160	55 - 60

The times indicated in the table do not include preheating times and are provided only as a guide.

Information for Supervisory Bodies

Fan forced mode

The ECO function used to establish the energy efficiency class is compliant with the specifications of European standard EN 60350-1.

See the “To save energy” section in the INSTRUCTIONS chapter.

Conventional heating mode

To use the STATIC mode, you have to skip the preheating stage (see the section “Preheating stage” in the USE chapter.

See the “To save energy” section in the INSTRUCTIONS chapter.

Minute minder

This function only operates the buzzer at the end of the countdown.

1. With the Function Knob at position 0, press the temperature knob.

The display shows 00:00 and the indicator light flashes.

2. Within 3 seconds turn the temperature knob to set the duration of the minute minder (from 1 minute to 13 hours).
3. Wait 3 seconds.

The indicator light stops flashing and the minute minder starts.

During the function, the display shifts to low brightness after 2 minutes from the last knob operation.

End of the minute minder

1. Wait for the buzzer to indicate that the time has finished.

The digits 00:00 and the indicator light flash.

2. Turn the temperature knob to select another minute minder.

or

3. Press the temperature knob to deactivate the buzzer and exit the minute minder function.

After a few seconds, the display shows the current time.

To delete a minute minder

1. Press the temperature knob.

The indicator light flashes on the display.

2. Within 3 seconds, turn the temperature knob counter-clockwise until the minute minder value is reset.
3. Wait 3 seconds to exit the minute minder function.

Special functions

1. Turn the function knob until the following text is displayed.



2. Press the display knob to enter the special functions menu.

For functions CLEA / PYro (depending on the model) and dESC see chapter Special cleaning functions.

Turbo

Allows quick cooking on multiple shelves without mixing the aromas. Perfect for large volumes that call for intense cooking.

3. After entering the special functions menu, turn the temperature knob until the Turbo function is selected.



4. Press the temperature knob to confirm the function.
5. Wait 3 seconds to start the function or press the temperature knob to enter any setting of function duration, function end time...



6. At the end, turn the function knob to position 0 to exit the function.

Rapid defrost

This function allows you to defrost food on the basis of a selectable time.

1. Place the food to be defrosted inside the oven.
2. After entering the special functions menu, turn the temperature knob until the defrost mode is selected.



3. Press the temperature knob to confirm the function.

The display shows 00:00 and the indicator lights and flashes.



4. Turn the temperature knob to set the defrosting time (from 1 minute to 13 hours) (e.g. "1:30").
5. Wait 3 seconds or press the temperature knob to start the function.

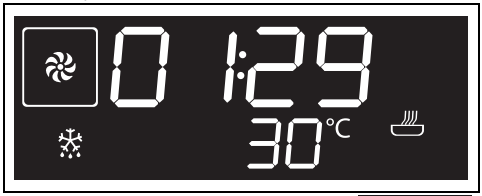

At the end, the flashing wording StOP is displayed and a buzzer will sound that can be deactivated by opening the door and/or pressing/turning any of the two knobs.

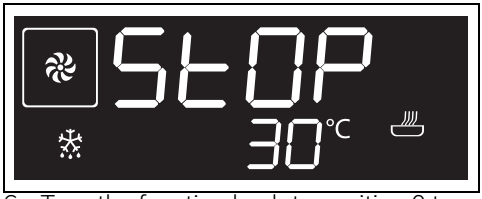

6. Turn the function knob to position 0 to exit the function.

Proving

For successful proving, a container of water should be placed in the bottom of the oven.

EN

1. Position the dough to prove on the second level.
2. After entering the special functions menu, turn the temperature knob until Proving mode is selected.



3. Press the temperature knob to confirm the function.
4. Wait 3 seconds to start the function or press the temperature knob to enter any setting of function duration, function end time...

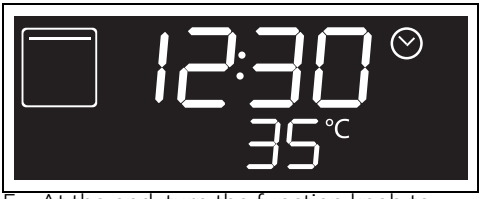

5. At the end, turn the function knob to position 0 to exit the function.

Sabbath mode

This function results in the appliance operating in a particular way:

- Cooking can proceed for max. 73 hours, it is not possible to set any cooking duration.
- No pre-heating will be performed.
- The cooking temperature which can be selected varies between 60-150 °C.
- Oven light disabled, any operation such as opening the door (where present) or manual activation with the knob will not activate the light.
- The internal fan remains turned off.
- Knob illumination and audible prompts remain disabled.

After activating the Sabbath mode the settings cannot be altered. Any action on the knobs will produce no effect; only the function knob remains active to allow you to return to 0 and switch the function off.

1. Place the dish into the oven cavity.
2. After entering the special functions menu, turn the temperature knob until the Sabbath mode is selected.

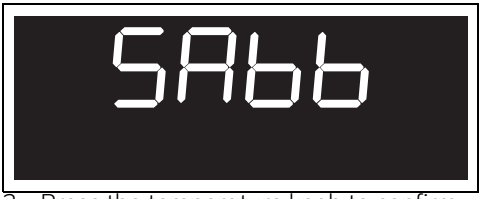

3. Press the temperature knob to confirm the function.

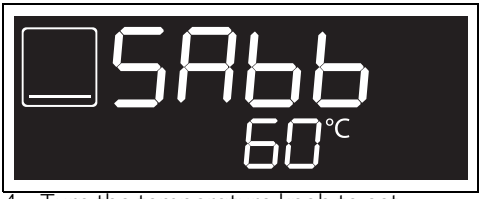

4. Turn the temperature knob to set required temperature (for example "90°C").
5. Press the temperature knob to start the function.

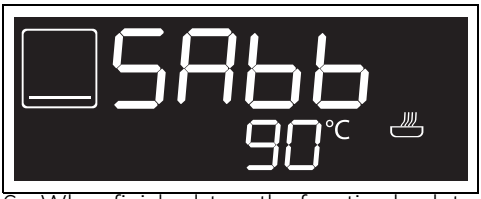

6. When finished, turn the function knob to position 0 to end cooking.

Settings

1. Turn the function knob until the following text appears on the display.



2. Press the temperature knob to access the settings menu.

Current time

After entering the settings menu, turn the temperature knob until the current time

function is selected.



1. Press temperature knob to start adjusting the current time (e.g. "12:30").

During this procedure, the indicator light and the symbols flash.



2. Turn the temperature knob to select the current time.



3. Press the temperature knob to set the current time and go to the selection of minutes.



4. Turn the temperature knob to select the minutes of the current time.



5. Press the temperature knob to finish adjustment.



6. Turn the temperature knob to select a new setting or wait 10 seconds.

Control lock (children safety)

This mode allows the appliance to lock the controls automatically after one minute of normal operation without any intervention from the user.

1. After entering the settings menu, turn the temperature knob until the control lock function is selected.



2. Press the temperature knob to confirm.

The indicator light flashes.

3. Within 10 seconds turn the temperature knob to activate the control lock function.



4. Press the temperature knob to confirm.
5. Turn the display knob to select a new setting.

In normal operation, the control lock is indicated by the indicator light coming on.

Touching or varying the position of the knobs, the display will show the wording bLOC for two seconds.

To release the lock temporarily during cooking, hold the temperature knob down for 5 seconds. One minute after the last setting the lock will become active again.

Showroom (for showrooms only)

This mode allows the appliance to deactivate all heating elements, while keeping the control panel active.

1. After entering the settings menu, turn the temperature knob until the showroom function is selected.

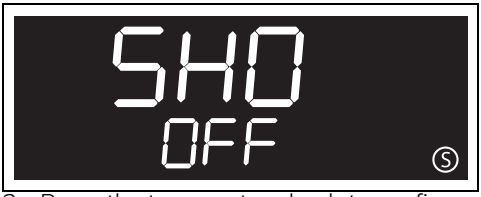

2. Press the temperature knob to confirm.
3. Turn the temperature knob to activate the showroom function.



4. Press the temperature knob to confirm or wait 10 seconds.

The activated showroom is indicated on the display by the Ⓢ indicator light on.

To use the appliance normally, set this function to OFF.

Keep warm

This mode allows the appliance after cooking finishes with a cooking cycle for which a duration has been set (if this is not manually interrupted), to keep cooked food warm (at low temperatures) without altering the taste and aromas obtained during cooking.

1. After entering the settings menu, turn the temperature knob until the keep warm function is selected.

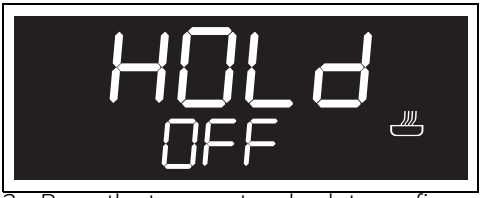

2. Press the temperature knob to confirm.
3. Turn the temperature knob to activate the keep warm function.

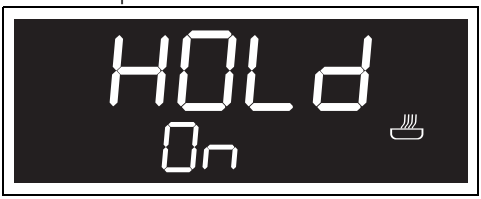

4. Press the temperature knob to confirm.

To use the appliance normally, set this function to OFF.

CLEANING AND MAINTENANCE

Cleaning the appliance

See General safety instructions.

Cleaning the surfaces

To keep the surfaces in good condition, they should be cleaned regularly after use. Let them cool first.

Ordinary daily cleaning

Always and only use specific products that do not contain abrasives or chlorine-based acids.

Pour the product onto a damp cloth and wipe the surface, rinse thoroughly and dry with a soft cloth or a microfibre cloth.

Food stains or residues

Do not use steel sponges and sharp scrapers as they will damage the surface.
Use normal, non-abrasive products and a wooden or plastic tool, if necessary. Rinse thoroughly and dry with a soft cloth or a microfibre cloth.
Do not allow residues of sugary foods (such as jam) to set inside the oven. If left to set for too long, they might damage the enamel

lining of the oven.

Cleaning the external glass

To clean the external glass, use a first dry cloth and moisten it with the cleaning product; then finish cleaning with a second dry cloth, preferably microfibre, to remove any residue and prevent streaks.

If particularly stubborn dirt is present, it is recommended to use a degreasing product before carrying out the above procedure.

Cleaning the door

Door disassembly

For easier cleaning it is recommended to remove the door and place it on a tea towel. To remove the door proceed as follows:

1. Open the door completely and insert two pins into the holes on the hinges indicated in the figure.

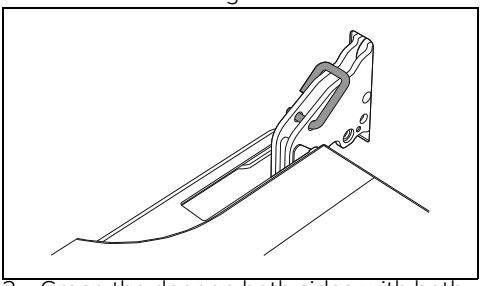

2. Grasp the door on both sides with both hands, lift it forming an angle of around 30° and remove it.

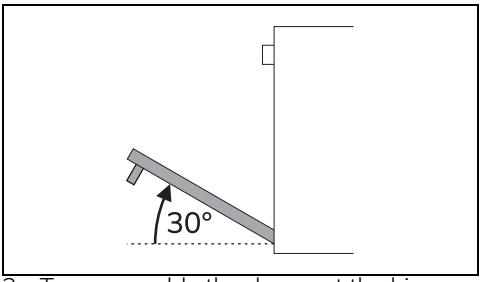

3. To reassemble the door, put the hinges in the relevant slots in the oven, making sure that grooved sections A are resting completely in the slots.

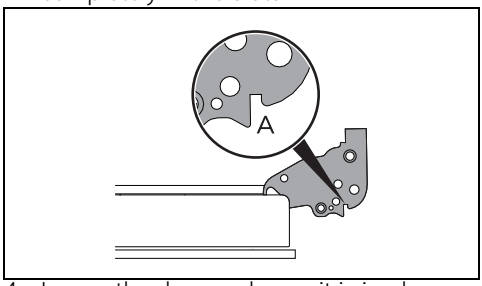

4. Lower the door and once it is in place remove the pins from the holes in the hinges.

Cleaning the door glazing

The glass in the door should always be kept thoroughly clean. Use absorbent kitchen roll. In case of stubborn dirt, wash with a damp sponge and an ordinary detergent.

Removing the internal glass panes

For easier cleaning the internal glass panes of the door can be removed.

1. Lock the door with the appropriate pins.
2. Remove the internal glass pane by pulling the rear part gently upwards, following the movement indicated by the arrows 1.

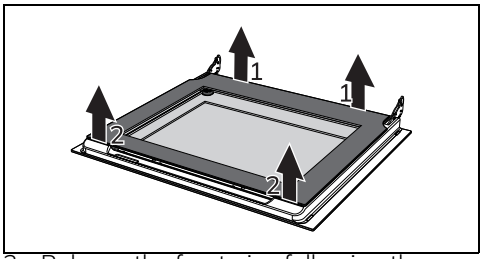

3. Release the front pins following the movement indicated by the arrows 2
4. Then remove the inner glass pane from the front profile.

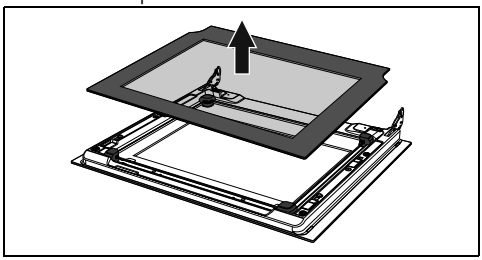

EN

5. Remove the intermediate glass unit by lifting it upwards.

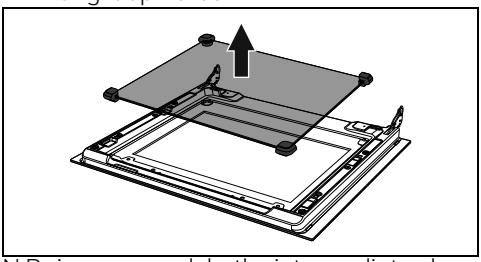

N.B.: in some models, the intermediate glass unit consists of two glasses.

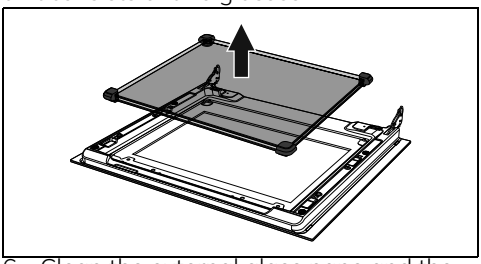

6. Clean the external glass pane and the panes removed previously.

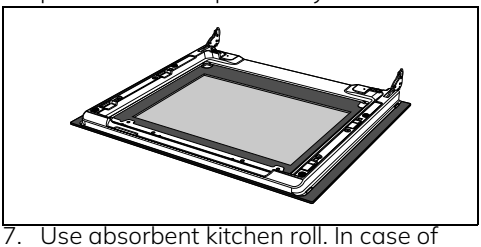

7. Use absorbent kitchen roll. In case of stubborn dirt, wash with a damp sponge and neutral detergent.
8. Reinsert the intermediate glass unit and reposition the inner glass.

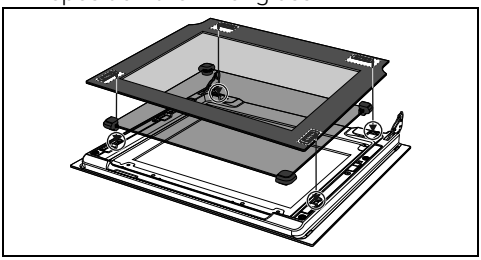

9. Be sure to fit the 4 pins of the inner glass well into their seats on the door.

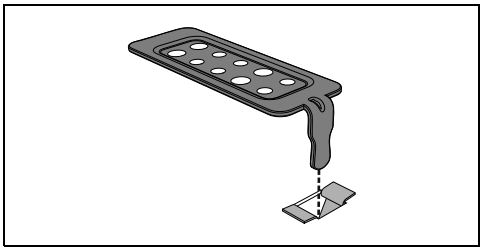

Cleaning the oven cavity

In order to keep your oven in the best possible condition, clean it regularly after letting it cool down.

Avoid letting food residue dry inside the oven cavity, as this could damage the enamel.

Take out all removable parts before cleaning.

For easier cleaning, it is recommended to remove:

- the door;
- The rack/tray support frames.

In the event you are using specific cleaning products, we recommend running the oven at maximum temperature for 15-20 minutes in order to eliminate any residue.

Drying

Cooking food generates moisture inside the appliance. This is a normal phenomenon and does not affect the appliance's operation in any way.

Each time you finish cooking:

1. Let the appliance cool down.
2. Remove any dirt from inside the appliance.
3. Dry the interior of the appliance with a soft cloth.
4. Leave the door open until the inside of the appliance has dried completely.

Removing racks/trays support frames

Removing the rack/tray support frames enables the sides to be cleaned more easily.

To remove the rack/tray support frames:

- Pull the frame towards the inside of the oven cavity to unhook it from its groove A, then slide it out of the seats B at the

back.

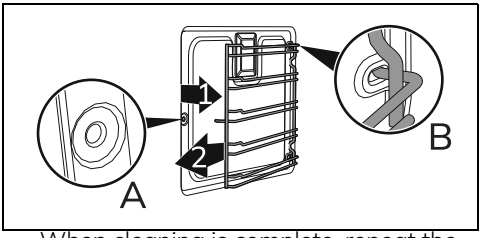

- When cleaning is complete, repeat the above procedures to put the rack/tray support frames back in.

Cleaning the pizza cover

It is recommended to clean and dry the pizza cover well after each Direct Steam cooking.

Commonly used cleaning products can be used; avoid products that are too aggressive and/or acidic.

Remove in sequence the pizza cover (1) and the base (2) on which it is placed. The base has to be lifted a few millimetres, then pulled outwards.

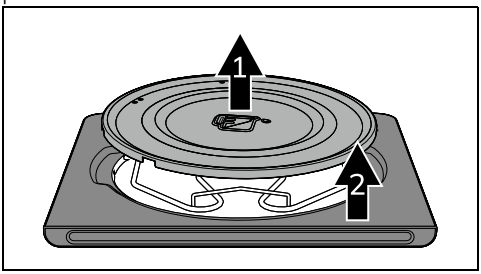

Cleaning the pizza stone

The pizza stone should be washed separately according to the following instructions:

The stone must be cleaned after every use. Do not heat it again if it has any encrustations. To clean, pour 50 cc of vinegar onto the stone, leave it to act for 10 minutes, then remove it by wiping with a metallic mesh or abrasive sponge. Rinse with water then leave to dry.

- Before cleaning, remove any dirt burnt onto the stone with the aid of a metal spatula or a scraper of the kind used for cleaning glass ceramic hobs.
- For best results, the stone must still be warm; otherwise, wash it in hot water.
- Use metal mesh sponges or abrasive scotch-brite pads, dipped in lemon or vinegar.
- Never use detergents.
- Never wash in the dishwasher.
- Never leave the stone to soak.
- The damp stone must not be used for a least 8 hours after the end of the cleaning procedures.
- Over time, slight cracks may appear on the surface of the stone. This is due to the normal expansion caused by high temperatures of the enamel coating the stone.

Vapor Clean (on some models only)



See General safety instructions.



The Vapor Clean function is an assisted cleaning procedure which facilitates the removal of dirt. Thanks to this process, it is possible to clean the inside of the oven very easily. The dirt residues are softened by the heat and water vapour for easier removal afterwards.

Preliminary operations

Before starting the Vapor Clean function:

- Completely remove all accessories from inside the oven.
- Remove the rack/tray support frames.
- Remove the self-cleaning panels if installed.
- Place the pizza cover in the housing on the base of the oven in place of the pizza stone.
- Pour about 120 cc of water into the pizza cover, starting from the centre as shown. Make sure it does not overflow out of the pizza cover.

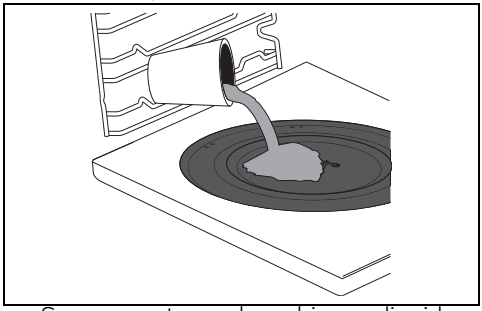

- Spray a water and washing up liquid solution inside the oven using a spray nozzle. Direct the spray against the side walls, upwards, downwards and towards the deflector (models without

EN

self-cleaning panels only).

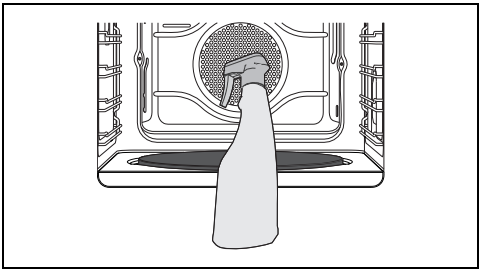

We recommend spraying approx. 20 times at the most.

- Close the door.

Vapor Clean cycle setting

If the internal temperature is greater than the required one, the function will be stopped immediately and the display shows the following text:



Let the appliance cool down before activating the function.

1. Turn the function knob until the following text is displayed.



The duration and temperature parameters cannot be changed by the user.

2. Wait 3 seconds to start the function (or press the temperature knob before waiting 3 seconds) to start cooking.



3. At the end of the Vapor Clean cycle the flashing wording StOP is displayed and a buzzer will sound that can be deactivated by opening the door and/or pressing/turning any of the two knobs.



4. Turn the function knob to position 0 to exit the function.

Programmed Vapor Clean cycle

It is possible to program the Vapor Clean function start time, like any cooking function.

1. After selecting the Vapor Clean function, turn the temperature knob (the indicator light lights up) to set the time at which you want the Pyrolysis function to end.
2. Wait 3 seconds to confirm the data entered.

The appliance waits until the set start time to start the Vapour Clean function.

Vapor Clean End

1. Turn the function knob to 0 to exit from the function.
2. Open the door and wipe away the less stubborn dirt with a microfibre cloth.
3. Use a non-scratch sponge with brass filaments on hard to remove deposits.
4. In case of grease residues use specific oven cleaning products.
5. Remove the residual water inside the oven.
6. Replace the self-cleaning panels and the rack/tray support frames, if fitted.

For greater hygiene and to avoid foods taking on unpleasant odours:

- We recommend drying the inside of the oven with a fan assisted function at 160°C for around 10 minutes.
- If self-cleaning panels are fitted, we recommend that you dry the inside of the oven with a simultaneous catalytic cycle.

We recommend wearing rubber gloves for these operations.

We recommend removing the door in order to make the manual cleaning of the parts that are difficult to reach easier.

Extraordinary maintenance

Seal maintenance tips

The seal should be soft and elastic.

- To keep the seal clean, use a non-abrasive sponge and wash with lukewarm water.

Replacing the internal light bulb

Power voltage
Danger of electrocution

- Unplug the appliance.
- Wear protective gloves.

1. Completely remove all accessories from inside the oven.
2. Remove the rack/tray support frames.
3. Use a tool (e.g. a spoon) to remove the bulb cover.

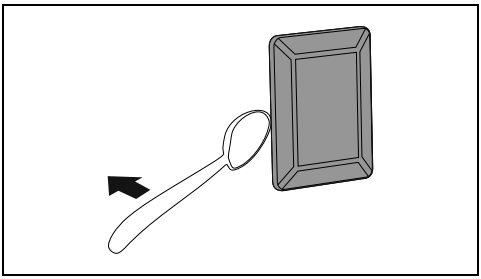

Take care not to scratch the enamel of the oven cavity wall.

4. Slide out and remove the light bulb.

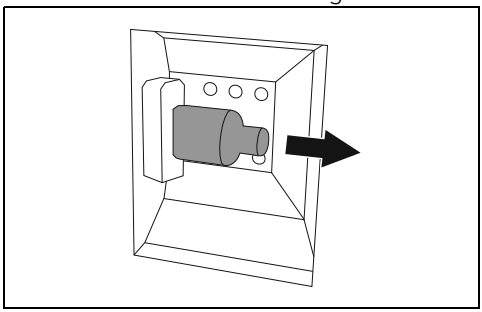

Do not touch the halogen light bulb directly with your fingers, use an insulating material.

5. Replace the light bulb with one of the same type (40 W).
6. Refit the cover. Ensure the moulded part of the glass (A) is facing the door.

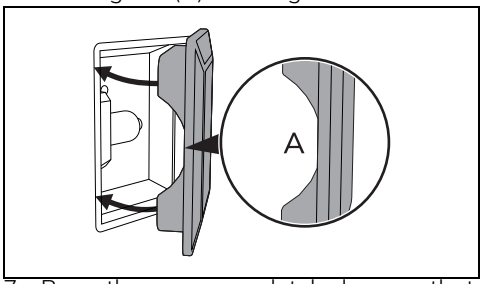

7. Press the cover completely down so that it attaches perfectly to the bulb support.

INSTALLATION

Electrical connection

See General safety instructions.

General information

Check the mains characteristics against the data indicated on the plate.
The identification plate bearing the technical data, serial number and brand name is visibly positioned on the appliance.
Do not remove this plate for any reason.
The appliance must be connected to ground using a wire that is at least 20 mm longer than the other wires.

The appliance can work in the following modes:

- 220-240 V~

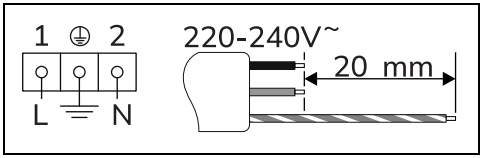

3 x 1.5 mm² three-core cable.

The values indicated above refer to the cross section of the internal lead.

The aforementioned power cables are sized taking into account the coincidence factor (in compliance with standard EN 60335-2-6).

Fixed connection

Fit the power line with an all-pole circuit breaker with a contact separation distance sufficient to provide complete disconnection in category III overvoltage conditions, pursuant to installation regulations.

For the Australian/New Zealand market:

The circuit breaker incorporated in the fixed connection must comply with AS/NZS 3000.

Connection with plug and socket

Make sure that the plug and socket are of the same type.
Avoid using adapters, gang sockets or shunts as these could cause overheating and a risk of burns.

Cable replacement

Power voltage
Danger of electrocution

- Disconnect the mains power supply.

1. Unscrew the rear casing screws and remove the casing to access the terminal board.

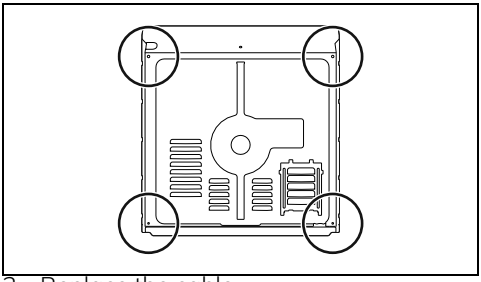

2. Replace the cable.
3. Make sure that the cables (for the oven or any hob) follow the best route in order to avoid any contact with the appliance.

Positioning

See General safety instructions.

Position of the power cable

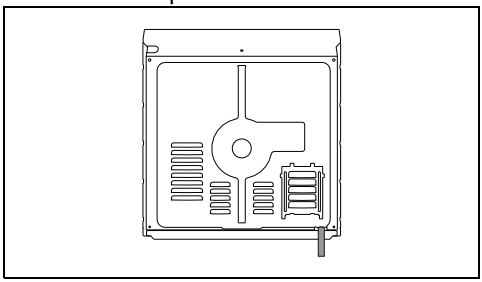

Front panel seal

Glue the supplied seal to the rear part of the front panel to avoid water or other liquids from leaking in.

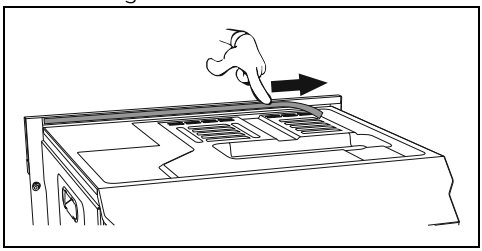

Fastening bushings

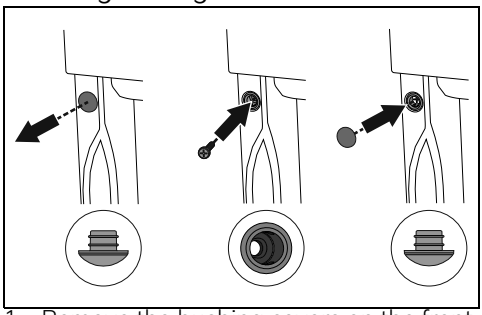

1. Remove the bushing covers on the front of the appliance.
2. Mount the appliance into the recess.
3. Secure the appliance to the cabinet using screws.
4. Cover the bushings with the previously removed covers.

Appliance overall dimensions (mm)

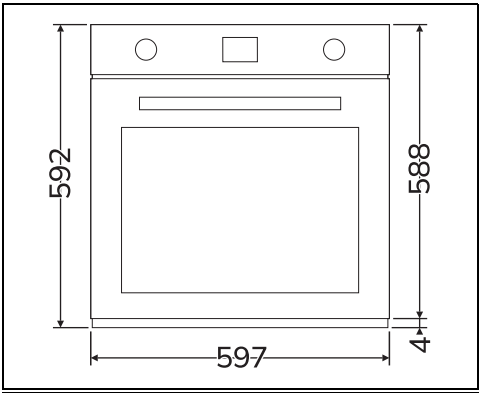

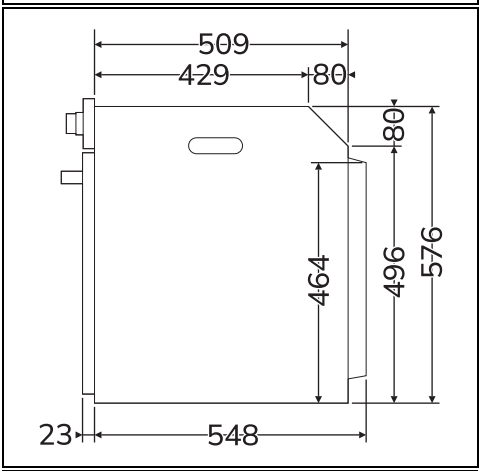

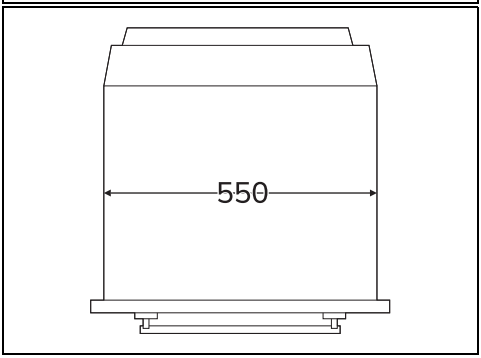

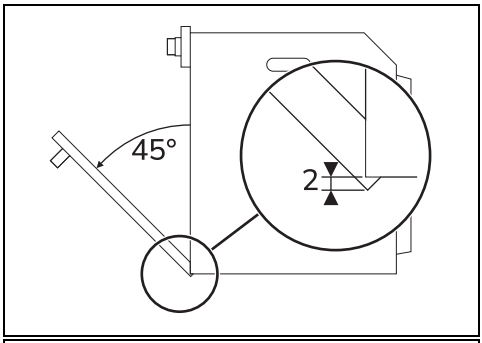

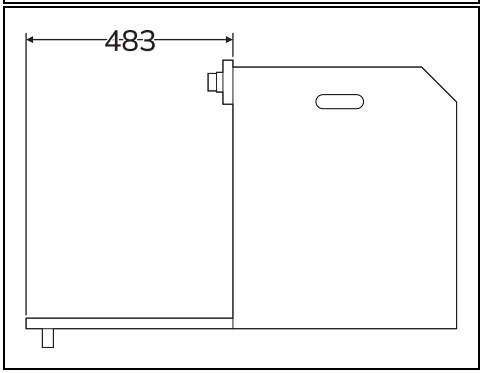

EN

Mounting into a column (mm)

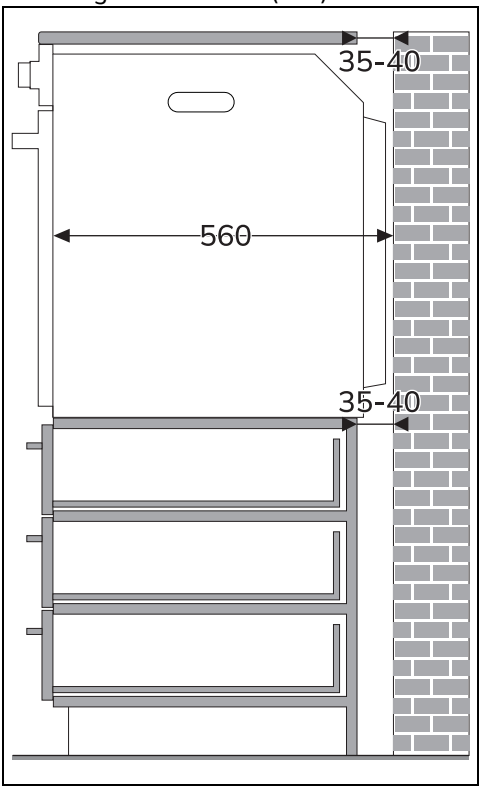

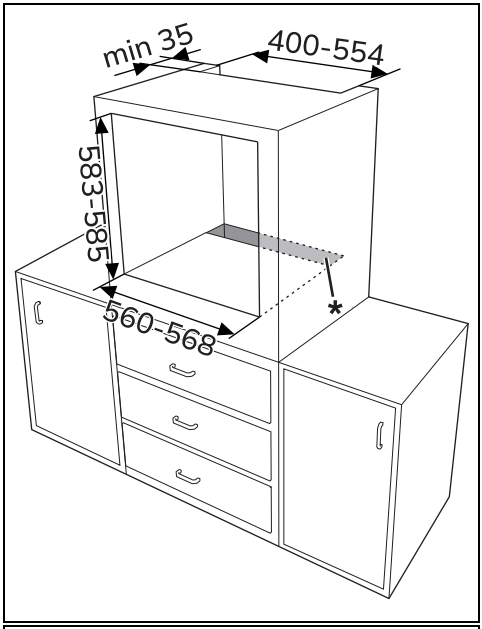

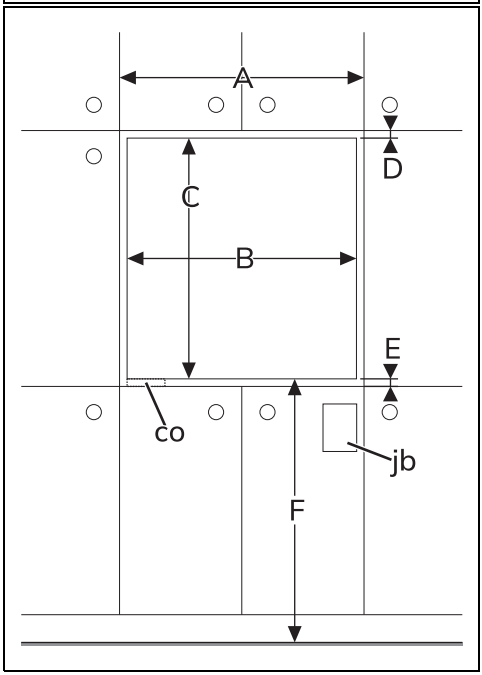

*Make sure that the cabinet top/ rear section has an opening approx. 35-40 mm deep.

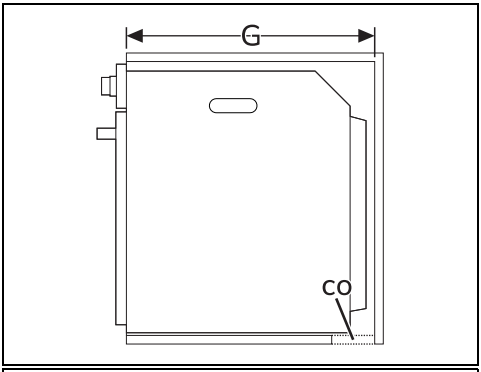

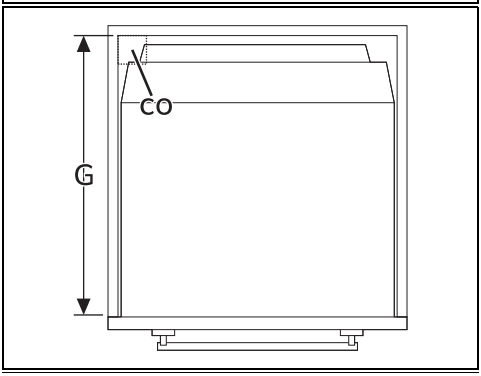

A	min. 603 mm
B	560 - 568 mm
C	583 - 585 mm
D	9 - 11 mm
E	min. 5 mm
F	121 - 1105 mm
G	min. 560 mm
H	min. 594 mm
co	Cutout for power cord (min. 6 cm^2)
jb	Electrical connection box

Mounting under worktops (mm)

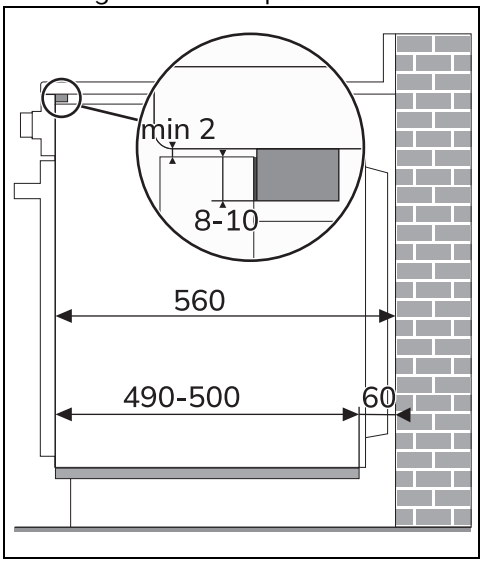

If the appliance is to be built-in under a worktop, a wooden bar has to be installed order to use the seal that is glued to the back of the front panel to prevent water or other liquids leaking in.

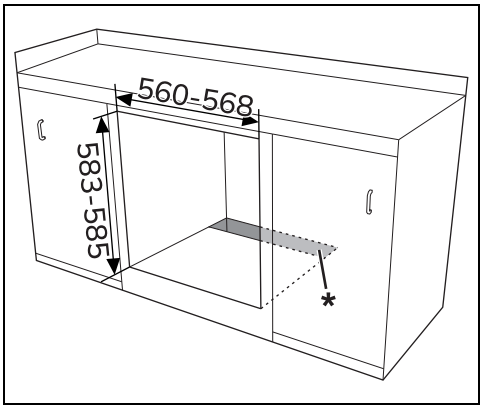

*Make sure that the piece of furniture top/rear part has an opening approx. 60 mm deep.

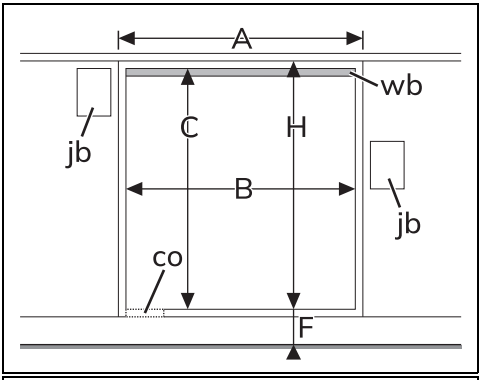

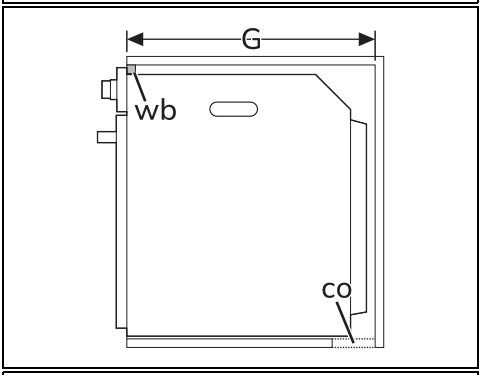

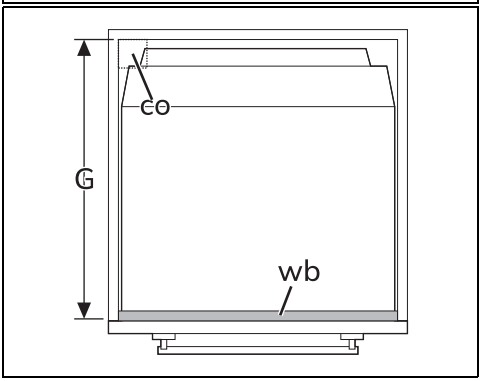

A	min. 603 mm
B	560 - 568 mm
C	583 - 585 mm
D	9 - 11 mm
E	min. 5 mm
F	121 - 1105 mm
G	min. 560 mm
H	min. 594 mm
co	Cutout for power cord (min. 6 cm^2)
jb	Electrical connection box
wb	Wooden bar (recommended)