Küppersbusch

ALLERFEINSTE KÜCHENTECHNIK

Gebruiks-aanwijzing

User manual

Notice d'utilisation

Benutzer-information

Vriezer

Freezer

Congélateur

Gefriergerät

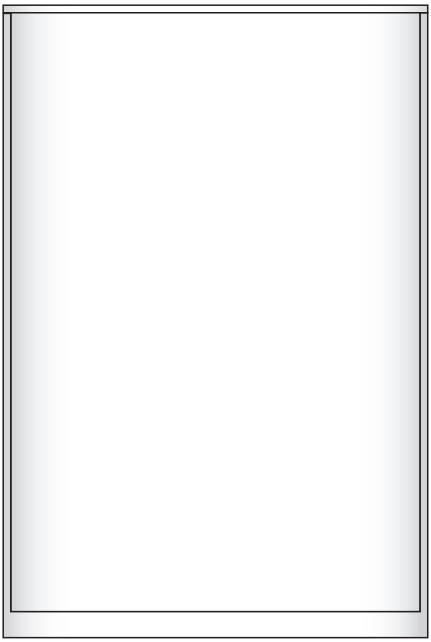

ITE1370-2

CONTENTS

Safety instructions	16	Care and cleaning	21
Control panel	18	What to do if…	22
First use	20	Technical data	23
Daily use	20	Installation	23
Helpful Hints and Tips	21	Environmental concerns	29

Subject to change without notice.

SAFETY INSTRUCTIONS

In the interest of your safety and to ensure the correct use, before installing and first using the appliance, read this user manual carefully, including its hints and warnings. To avoid unnecessary mistakes and accidents, it is important to ensure that all people using the appliance are thoroughly familiar with its operation and safety features. Save these instructions and make sure that they remain with the appliance if it is moved or sold, so that everyone using it through its life will be properly informed on appliance use and safety.
For the safety of life and property keep the precautions of these user's instructions as the manufacturer is not responsible for damages caused by omission.

Children and vulnerable people safety

- This appliance is not intended for use by persons (including children) with reduced physical, sensory or mental capabilities, or lack of experience and knowledge, unless they have been given supervision or instruction concerning use of the appliance by a person responsible for their safety.
  Children should be supervised to ensure that they do not play with the appliance.
- Keep all packaging well away from children. There is risk of suffocation.
- If you are discarding the appliance pull the plug out of the socket, cut the connection cable (as close to the appliance as you can) and remove the door to prevent playing children to suffer electric shock or to close themselves into it.
- If this appliance featuring magnetic door seals is to replace an older appliance having a spring lock (latch) on the door or lid, be sure to make that spring lock unusable before you discard the old appliance. This will prevent it from becoming a death trap for a child.

General safety

Warning!

Keep ventilation openings, in the appliance enclosure or in the built-in structure, clear of obstruction.

- The appliance is intended for keeping foodstuff and/or beverages in a normal household and similar applications such as:
  - staff kitchen areas in shops, offices and other working environments;
  - farm houses and by clients in hotels, motels and other residential type environments;
  - bed and breakfast type environments;
  - catering and similar non-retail applications.
- Do not use a mechanical device or any artificial means to speed up the thawing process.
- Do not use other electrical appliances (such as ice cream makers) inside of refrigerating appliances, unless they are approved for this purpose by the manufacturer.
- Do not damage the refrigerant circuit.
- The refrigerant isobutane (R600a) is contained within the refrigerant circuit of the appliance, a natural gas with a high level of environmental compatibility, which is nevertheless flammable.
  During transportation and installation of the appliance, be certain that none of the components of the refrigerant circuit become damaged.
  If the refrigerant circuit should become damaged:

– avoid open flames and sources of ignition
– thoroughly ventilate the room in which the appliance is situated

- It is dangerous to alter the specifications or modify this product in any way. Any damage to the cord may cause a short-circuit, fire and/or electric shock.

⚠ **Warning!** Any electrical component (power cord, plug, compressor) must be replaced by a certified service agent or qualified service personnel to avoid hazard.

1. Power cord must not be lengthened.
2. Make sure that the power plug is not squashed or damaged by the back of the appliance. A squashed or damaged power plug may overheat and cause a fire.
3. Make sure that you can come to the mains plug of the appliance.
4. Do not pull the mains cable.
5. If the power plug socket is loose, do not insert the power plug. There is a risk of electric shock or fire.
6. You must not operate the appliance without the lamp cover (if foreseen) of interior lighting.

- This appliance is heavy. Care should be taken when moving it.
- Do not remove nor touch items from the freezer compartment if your hands are damp/wet, as this could cause skin abrasions or frost/freezer burns.
- Avoid prolonged exposure of the appliance to direct sunlight.
- Bulb lamps (if foreseen) used in this appliance are special purpose lamps selected for household appliances use only. They are not suitable for household room illumination.

Daily Use

- Do not put hot pot on the plastic parts in the appliance.
- Do not store flammable gas and liquid in the appliance, because they may explode.
- Do not place food products directly against the air outlet on the rear wall. (If the appliance is Frost Free)
- Frozen food must not be re-frozen once it has been thawed out.
- Store pre-packed frozen food in accordance with the frozen food manufacturer's instructions.
- Appliance's manufacturers storage recommendations should be strictly adhered to. Refer to relevant instructions.
- Do not place carbonated or fizzy drinks in the freezer compartment as it creates pressure on the container, which may cause it to explode, resulting in damage to the appliance.
- Ice lollies can cause frost burns if consumed straight from the appliance.

Care and cleaning

- Before maintenance, switch off the appliance and disconnect the mains plug from the mains socket.
- Do not clean the appliance with metal objects.
- Do not use sharp objects to remove frost from the appliance. Use a plastic scraper.

Installation

Important! For electrical connection carefully follow the instructions given in specific paragraphs.

- Unpack the appliance and check if there are damages on it. Do not connect the appliance if it is damaged. Report possible damages immediately to the place you bought it. In that case retain packing.
- It is advisable to wait at least four hours before connecting the appliance to allow the oil to flow back in the compressor.
- Adequate air circulation should be around the appliance, lacking this leads to overheating. To achieve sufficient ventilation follow the instructions relevant to installation.
- Wherever possible the back of the product should be against a wall to avoid touching or catching warm parts (compressor, condenser) to prevent possible burn.
- The appliance must not be located close to radiators or cookers.
- Make sure that the mains plug is accessible after the installation of the appliance.

- Connect to potable water supply only (If a water connection is foreseen).

Service

- Any electrical work required to do the servicing of the appliance should be carried out by a qualified electrician or competent person.
- This product must be serviced by an authorized Service Centre, and only genuine spare parts must be used.

Environment Protection

This appliance does not contain gasses which could damage the ozone layer, in either its refrigerant circuit or insulation materials. The appliance shall not be discarded together with the urban refuse and rubbish. The insulation foam contains flammable gases: the appliance shall be disposed according to the applicable regulations to obtain from your local authorities. Avoid damaging the cooling unit, especially at the rear near the heat exchanger. The materials used on this appliance marked by the symbol ♲ are recyclable.

CONTROL PANEL

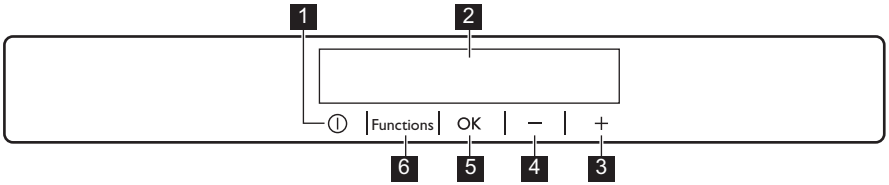

1 ON/OFF button
2 Display
3 Temperature warmer button
4 Temperature colder button
5 OK button
6 Functions button

It is possible to change predefined sound of buttons to a loudly one by pressing together Functions button and Temperature colder button for some seconds. Change is reversible.

Display

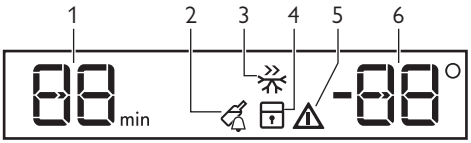

1 Timer function
2 Drinks Chill function
3 Fast Freeze function
4 Child Lock function
5 Alarm indicator
6 Temperature indicator

Switching on

To switch on the appliance do these steps:

1. Connect the mains plug to the power socket.
2. Press the ON/OFF button if the display is off.
3. The alarm buzzer may sound after a few seconds.
   To reset the alarm refer to "Door open alarm".
   If “DEMO” appears on the Display, the appliance is in demonstration mode: refer to “Troubleshooting” paragraph.
4. The temperature indicators show the set default temperature.

To select a different set temperature refer to "Temperature regulation".

Switching off

To switch off the appliance do these steps:

1. Press the ON/OFF button for 5 seconds.
2. The display switches off.
3. To disconnect the appliance from the power disconnect the mains plug from the power socket.

Temperature regulation

The set temperature of the freezer may be adjusted by pressing the temperature button.
Set default temperature:

- -18°C for the freezer

The temperature indicator shows the set temperature.
The set temperature will be reached within 24 hours.

Important! After a power failure the set temperature remains stored.

Fast Freeze function

To switch on the function:

1. Press the Functions button until the corresponding icon appears.
   The Fast Freeze indicator flashes.
2. Press the OK button to confirm.
   The Fast Freeze indicator is shown.

This function stops automatically after 52 hours.
To switch off the function before its automatic end:

1. Press the Functions button until the Fast Freeze indicator flashes.
2. Press the OK button to confirm.
3. The Fast Freeze indicator goes off.

Important! The function switches off by selecting a different freezer set temperature.

Drinks Chill function

The Drinks Chill function is to be used to set an acoustic alarm at the preferred time, useful for example when a recipe requires to cool down a mixture for a certain period of time, or when a reminder is needed in order not to forget the bottles placed in the freezer for fast cooling.
To switch on the function:

1. Press the Functions button until the corresponding icon appears.
   The Drinks Chill indicator flashes.
   The Timer shows the set value (30 minutes) for a few seconds.
2. Press the Temperature colder button and the Temperature warmer button to change the Timer set value from 1 to 90 minutes.
3. Press the OK button to confirm.
   The Drinks Chill indicator is shown.
   The Timer start to flash (min).

At the end of the countdown the Drinks Chill indicator flashes and an audible alarm sounds:

1. Remove any drinks contained in the freezer compartment.
2. Press OK button to switch off the sound and terminate the function.

It is possible to deactivate the function at any time during the countdown:

1. Press the Functions button until the Drinks Chill indicator flashes.
2. Press the OK button to confirm.
3. The Drinks Chill indicator goes off.

It is possible to change the time during the countdown and at the end by pressing the Temperature colder button and the Temperature warmer button.

Child Lock function

To lock the buttons from unintentional operation select the Child Lock function.
To switch on the function:

1. Press the Functions button until the corresponding icon appears.
2. The Child Lock indicator flashes.
3. Press the OK button to confirm.
   The Child Lock indicator is shown.

To switch off the function:

1. Press the Functions button until the Child Lock indicator flashes.
2. Press the OK button to confirm.
3. The Child Lock indicator goes off.

High temperature alarm

An increase in the temperature in the freezer compartment (for example due to an earlier power failure) is indicated by:

- flashing the alarm and freezer temperature indicators
- sounding of buzzer.

To reset the alarm:

1. Press any button.
2. The buzzer switches off.
3. The freezer temperature indicator shows the highest temperature reached for a few seconds. Then shows again the set temperature.
4. The alarm indicator continue to flash until the normal conditions are restored.

When the alarm has returned the alarm indicator goes off.

Door open alarm

An acoustic alarm will sound when the door is left open for around 80 seconds.
When normal conditions are restored (door closed), the acoustic alarm will stop.

FIRST USE

Cleaning the interior

Before using the appliance for the first time, wash the interior and all internal accessories with lukewarm water and some neutral soap so as to remove the typical smell of a brand-new product, then dry thoroughly.

Important! Do not use detergents or abrasive powders, as these will damage the finish.

DAILY USE

Freezing fresh food

The freezer compartment is suitable for freezing fresh food and storing frozen and deep-frozen food for a long time.
To freeze fresh food activate the Fast Freeze function at least 24 hours before placing the food to be frozen in the freezer compartment.
Place the fresh food to be frozen in the third compartment.
The maximum amount of food that can be frozen in 24 hours is specified on the **rating plate**, a label located on the inside of the appliance.
The freezing process lasts 24 hours: during this period do not add other food to be frozen.
After 24 hours, when the freezing process is completed, return to the required temperature (see "Temperature regulation").

Storage of frozen food

When first starting-up or after a period out of use, before putting the products in the compartment let the appliance run at least 2 hours on the higher settings.

Important! In the event of accidental defrosting, for example due to a power failure, if the power has been off for longer than the value shown in the technical characteristics chart under "rising time", the defrosted food must be consumed quickly or cooked immediately and then re-frozen (after cooling).

Thawing

Deep-frozen or frozen food, prior to being used, can be thawed in the refrigerator compartment or at room temperature, depending on the time available for this operation.
Small pieces may even be cooked still frozen, directly from the freezer: in this case, cooking will take longer.

Ice-cube production

This appliance is equipped with one or more trays for the production of ice-cubes. Fill these trays with water, then put them in the freezer compartment.

Important! Do not use metallic instruments to remove the trays from the freezer.

Cold accumulators

One or more cold accumulators are supplied in the freezer; these increase the length of time for which food will keep in the event of a power failure or breakdown.

HELPFUL HINTS AND TIPS

Hints for freezing

To help you make the most of the freezing process, here are some important hints:

- the maximum quantity of food which can be frozen in 24 hrs. is shown on the rating plate;
- the freezing process takes 24 hours. No further food to be frozen should be added during this period;
- only freeze top quality, fresh and thoroughly cleaned, foodstuffs;
- prepare food in small portions to enable it to be rapidly and completely frozen and to make it possible subsequently to thaw only the quantity required;
- wrap up the food in aluminium foil or polythene and make sure that the packages are airtight;
- do not allow fresh, unfrozen food to touch food which is already frozen, thus avoiding a rise in temperature of the latter;
- lean foods store better and longer than fatty ones; salt reduces the storage life of food;
- water ices, if consumed immediately after removal from the freezer compartment, can possibly cause the skin to be freeze burnt;
- it is advisable to show the freezing in date on each individual pack to enable you to keep tab of the storage time.

Hints for storage of frozen food

To obtain the best performance from this appliance, you should:

- make sure that the commercially frozen foodstuffs were adequately stored by the retailer;
- be sure that frozen foodstuffs are transferred from the foodstore to the freezer in the shortest possible time;
- not open the door frequently or leave it open longer than absolutely necessary;
- once defrosted, food deteriorates rapidly and cannot be refrozen;
- do not exceed the storage period indicated by the food manufacturer.

CARE AND CLEANING

Caution! Unplug the appliance before carrying out any maintenance operation.

This appliance contains hydrocarbons in its cooling unit; maintenance and recharging must therefore only be carried out by authorized technicians.

Periodic cleaning

The equipment has to be cleaned regularly:

- clean the inside and accessories with lukewarm water and some neutral soap.
- regularly check the door seals and wipe clean to ensure they are clean and free from debris.
- rinse and dry thoroughly.

Important! Do not pull, move or damage any pipes and/or cables inside the cabinet. Never use detergents, abrasive powders, highly perfumed cleaning products or wax polishes to clean the interior as this will damage the surface and leave a strong odour.

Clean the condenser (black grill) and the compressor at the back of the appliance with a brush. This operation will improve the performance of the appliance and save electricity consumption.

Important! Take care of not to damage the cooling system.

Many proprietary kitchen surface cleaners contain chemicals that can attack/damage the plastics used in this appliance. For this reason it is recommended that the outer casing of this appliance is only cleaned with warm water with a little washing-up liquid added.
After cleaning, reconnect the equipment to the mains supply.

Defrosting of the freezer

The freezer compartment of this model, on the other hand, is a "no frost" type. This means that there is no buildup of frost when it is in operation, neither on the internal walls nor on the foods.
The absence of frost is due to the continuous circulation of cold air inside the compartment, driven by an automatically controlled fan.

Periods of non-operation

When the appliance is not in use for long periods, take the following precautions:

- **disconnect the appliance from electricity supply**
- remove all food
- defrost (if foreseen) and clean the appliance and all accessories
- leave the door/doors ajar to prevent unpleasant smells.

If the cabinet will be kept on, ask somebody to check it once in a while to prevent the food inside from spoiling in case of a power failure.

WHAT TO DO IF…

Warning! Before troubleshooting, disconnect the mains plug from the mains socket.
Only a qualified electrician or competent person must do the troubleshooting that is not in this manual.

Important! There are some sounds during normal use (compressor, refrigerant circulation).

Problem	Possible cause	Solution
The appliance does not operate.	The appliance is switched off.	Switch on the appliance.
	The mains plug is not connected to the mains socket correctly.	Connect the mains plug to the mains socket correctly.
	The appliance has no power. There is no voltage in the mains socket.	Connect a different electrical appliance to the mains socket. Contact a qualified electrician.
The buzzer sounds. The Alarm light flashing.	The temperature in the freezer is too high.	Refer to "Excessive Temperature Alarm".
	The door is not closed correctly.	Refer to "Door open alarm".
The compressor operates continually.	The temperature is not set correctly.	Set a higher temperature.
	The door is not closed correctly.	Refer to "Closing the door".
	The door has been opened too frequently.	Do not keep the door open longer than necessary.
	The product temperature is too high.	Let the product temperature decrease to room temperature before storage.
	The room temperature is too high.	Decrease the room temperature.
	The Fast Freeze function is switched on.	Refer to "Fast Freeze function".
The temperature in the freezer is too low.	The temperature regulator is not set correctly.	Set a higher temperature.
	The Fast Freeze function is switched on.	Refer to "Fast Freeze function".

Problem	Possible cause	Solution
The temperature in the freezer is too high.	The temperature regulator is not set correctly.	Set a lower temperature.
	The door is not closed correctly.	Refer to "Closing the door".
	The product temperature is too high.	Let the product temperature decrease to room temperature before storage.
	Many products are stored at the same time.	Store less products at the same time.
	Products are too near to each other.	Store products so that there is cold air circulation.
Upper or lower square is shown in the temperature display.	An error has occurred in measuring the temperature	Call your service representative (the cooling system will continue to keep food products cold, but temperature adjustment will not be possible).
dEMo appears on the Display.	The appliance is in demonstration mode (dEMo).	Keep pressed approximately 10sec the OK button since a long sound of buzzer is heard and the Display shut off for a short while: appliance start works regularly.

Closing the door

1. Clean the door gaskets.
2. If necessary, adjust the door. Refer to "Installation".
3. If necessary, replace the defective door gaskets. Contact the Service Center.

TECHNICAL DATA

Dimension of the recess		
	Height	1030 mm
	Width	560 mm
	Depth	550 mm
Rising Time		26 h
Voltage		230-240 V
Frequency		50 Hz

The technical information are situated in the rating plate on the internal left side of the appliance and in the energy label.

INSTALLATION

Positioning

⚠ **Warning!** If you are discarding an old appliance that has a lock or catch on the door, you must ensure that it is made unusable to prevent young children being trapped inside.

Important! The appliance shall have the plug accessible after installation.

Install this appliance at a location where the ambient temperature corresponds to the climate class indicated on the rating plate of the appliance:

Climate class	Ambient temperature
SN	+10°C to + 32°C
N	+16°C to + 32°C
ST	+16°C to + 38°C
T	+16°C to + 43°C

Electrical connection

Before plugging in, ensure that the voltage and frequency shown on the rating plate correspond to your domestic power supply.

The appliance must be earthed. The power supply cable plug is provided with a contact for this purpose. If the domestic power supply socket is not earthed, connect the appliance to a separate earth in compliance with current regulations, consulting a qualified electrician.
The manufacturer declines all responsibility if the above safety precautions are not observed.
This appliance complies with the E.E.C. Directives.

Ventilation requirements

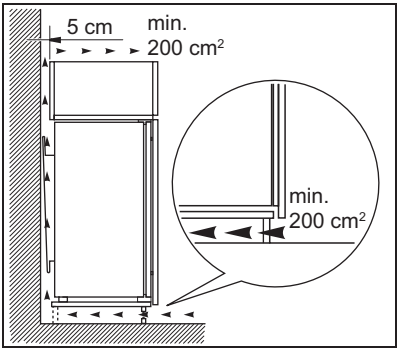

The airflow behind the appliance must be sufficient.

Door reversibility

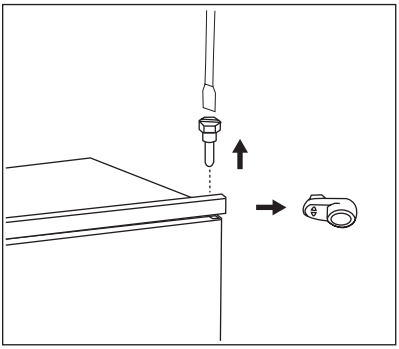

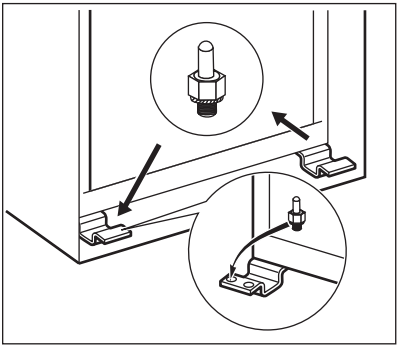

The door of the appliance opens to the right. If you want to open the door to the left, follow these steps before you install the appliance:

1. Loosen and remove the upper pin.
2. Remove the door.
3. Remove the spacer.
4. With a key, loosen the lower pin.

On the opposite side:

1. Tighten the lower pin.
2. Install the spacer.
3. Install the door.
4. Tighten the upper pin.

Installing the appliance

⚠ **Caution!** Make sure that the mains cable can move freely.

Do the following steps:

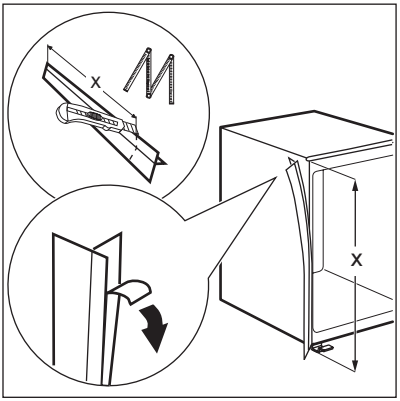

If necessary cut the adhesive sealing strip and apply it to the appliance as shown in figure.

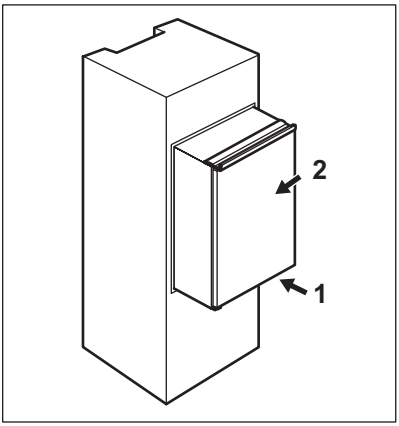

Install the appliance in the niche.
Push the appliance in the direction of the arrow (1) until the upper gap cover stops against the kitchen furniture.
Push the appliance in the direction of the arrow (2) against the cupboard on the opposite side of the hinge.

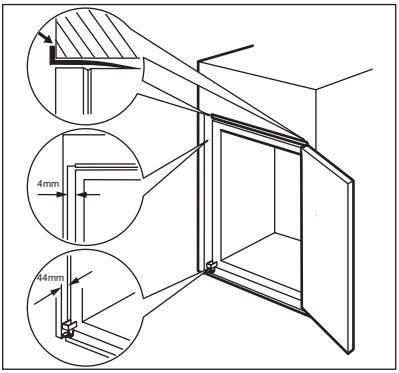

Adjust the appliance in the niche.
Make sure that the distance between the appliance and the cupboard front-edge is 44 mm.
The lower hinge cover (in the accessories bag) makes sure that the distance between the appliance and the kitchen furniture is correct.
Make sure that the clearance between the appliance and the cupboard is 4 mm.
Open the door. Put the lower hinge cover in position.

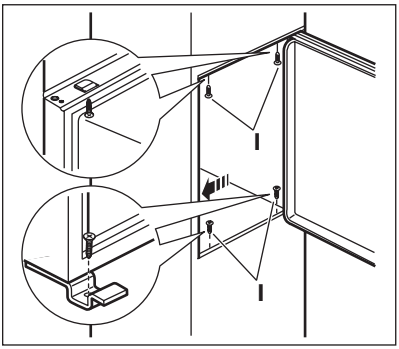

Attach the appliance to the niche with 4 screws.

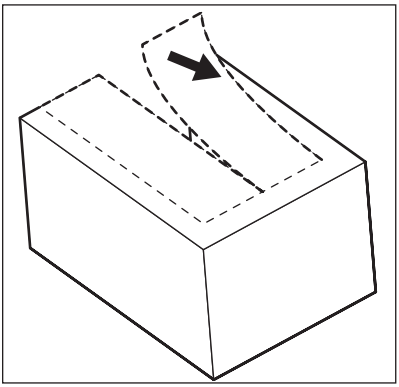

Remove the correct part from the hinge cover (E). Make sure to remove the part DX, in the case of right hinge, SX in opposite case.

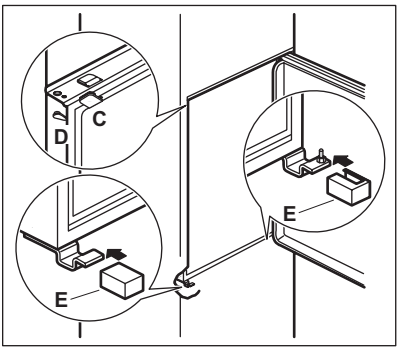

Attach the covers (C, D) to the lugs and the hinge holes.
Attach the hinge covers (E) to the hinge.

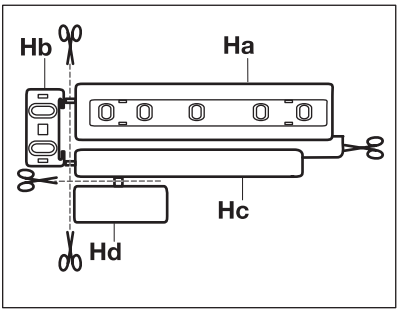

Disconnect the parts (Ha), (Hb), (Hc) and (Hd).

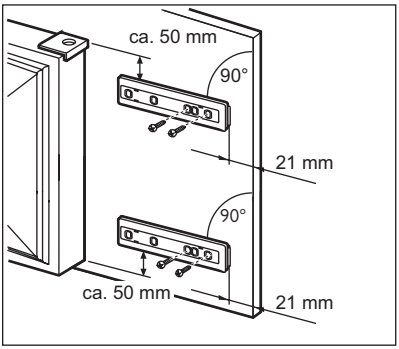

Install the part (Ha) on the inner side of the kitchen furniture door.

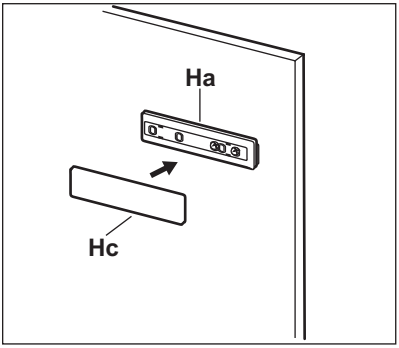

Push the part (Hc) on the part (Ha).

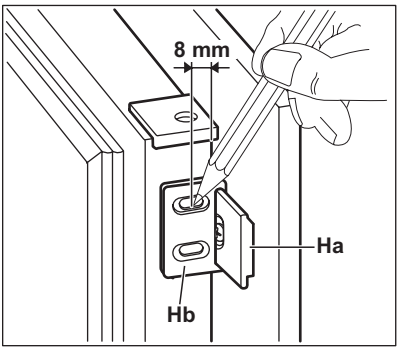

Open the appliance door and the kitchen furniture door at an angle of 90°.
Insert the small square (Hb) into guide (Ha).
Put together the appliance door and the furniture door and mark the holes.

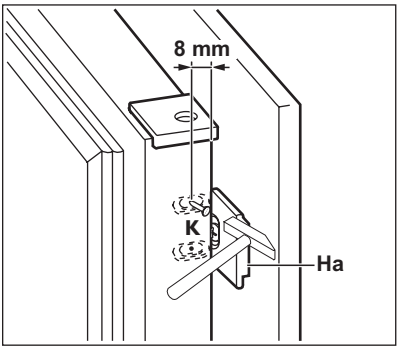

Remove the brackets and mark a distance of 8 mm from the outer edge of the door where the nail must be fitted (K).

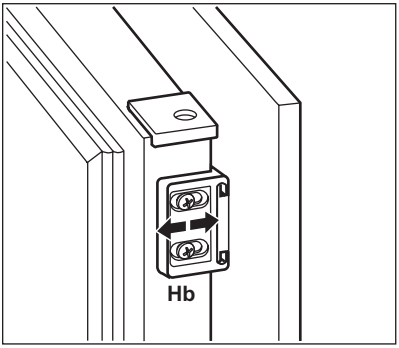

Place the small square on the guide again and fix it with the screws supplied.
Align the kitchen furniture door and the appliance door by adjusting the part (Hb).

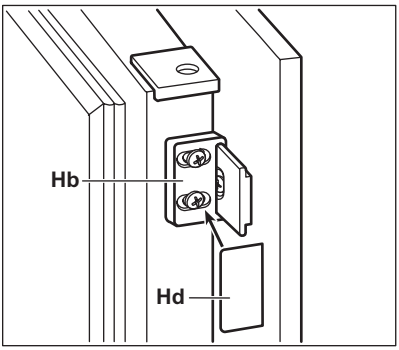

Press the part (Hd) on the part (Hb).
Do a final check to make sure that:

- All screws are tightened.
- The sealing strip is attached tightly to the cabinet.
- The door opens and closes correctly.

ENVIRONMENTAL CONCERNS

The symbol on the product or on its packaging indicates that this product may not be treated as household waste. Instead it should be taken to the appropriate collection point for the recycling of electrical and electronic equipment. By ensuring this product is disposed of correctly, you will help prevent potential negative consequences for the environment and human health, which could otherwise be caused by inappropriate waste handling of this product. For more detailed information about recycling of this product, please contact your local council, your household waste disposal service or the shop where you purchased the product.

222349475-A-102013