SIEMENS



Oven

HB.17.B..

en User manual and installation instructions

Register your product on My Siemens and discover exclusive services and offers.
siemens-home.bsh-group.com/welcome

The future moving in.

Siemens Home Appliances

Table of contents

USER MANUAL

1 Safety ... 2
2 Preventing material damage ... 4
3 Environmental protection and saving energy ... 5
4 Familiarising yourself with your appliance ... 6
5 Accessories ... 8
6 Before using for the first time ... 9
7 Basic operation ... 10
8 Rapid heating ... 10
9 Time-setting options ... 10
10 Programme ... 12
11 Childproof lock ... 14
12 Basic settings ... 14
13 Cleaning and servicing ... 15
14 Cleaning aid humidClean ... 16
15 Shelf supports ... 17
16 Appliance door ... 17
17 Troubleshooting ... 20
18 Disposal ... 21
19 Customer Service ... 22
20 How it works ... 22

21 INSTALLATION INSTRUCTIONS ... 25
21.1 General installation instructions ... 25

⚠ 1 Safety

Please read the safety information to ensure that you use the appliance safely.

1.1 General information

You can find general information for this instruction manual here.

- Read this instruction manual carefully. Only this will ensure you use the appliance safely and efficiently.
- This manual is intended for the installer and the user of the appliance.
- Follow the safety instructions and warnings.
- Keep the instruction manual and the product information safe for future reference or for the next owner.
- Check the appliance after unpacking it. Do not connect the appliance if it has been damaged in transit.

1.2 Intended use

Read the information on intended use to ensure that you use the appliance correctly and safely.
Only a licensed professional may connect appliances without plugs. Damage caused by incorrect connection is not covered under the warranty.
Only use this appliance:

- In accordance with these instructions for installation and use.
- To prepare meals and drinks.
- In private households and in enclosed spaces in a domestic environment.
- Up to an altitude of max. 4000 m above sea level.

1.3 Restriction on user group

Avoid risks to children and vulnerable persons.
This appliance may be used by children aged 8 or over and by people who have reduced physical, sensory or mental abilities or inadequate experience and/or knowledge, provided that they are supervised or have been instructed on how to use the appliance safely and have understood the resulting dangers.
Children must not play with the appliance.
Children must not perform cleaning or user maintenance unless they are at least 15 years old and are being supervised.
Keep children under the age of 8 years away from the appliance and power cable.

1.4 Safe use

Follow these safety instructions when using the appliance.
Always place accessories in the cooking compartment the right way round.
→ *"Accessories", Page 8*

⚠ WARNING – Risk of fire!
Combustible objects that are left in the cooking compartment may catch fire.

- ▶ Never store combustible objects in the cooking compartment.

- ▶ Never open the appliance door if there is smoke inside.
- ▶ Switch off the appliance and unplug it from the mains or switch off the circuit breaker in the fuse box.

Loose food remnants, fat and meat juices may catch fire.

- ▶ Before using the appliance, remove the worst of the food residues and remnants from the cooking compartment, heating elements and accessories.

Opening the appliance door creates a draught. Greaseproof paper may come into contact with the heating element and catch fire.

- ▶ Do not place greaseproof paper loosely over accessories when preheating the appliance.
- ▶ Always use a plate or baking tin to hold greaseproof paper down.
- ▶ Do not use more greaseproof paper than is necessary.
- ▶ Greaseproof paper must not extend over the edge of accessories.

⚠ WARNING – Risk of burns!

The appliance gets very hot.

- ▶ Never touch the inside surfaces of the cooking compartment or the heating elements while they are hot.
- ▶ Always allow the appliance to cool down.
- ▶ Keep children at a safe distance.

Accessories and cookware get very hot.

- ▶ Always use oven gloves to remove accessories or cookware from the cooking compartment.

When the cooking compartment is hot, any alcoholic vapours inside may catch fire.

- ▶ Never prepare food containing large quantities of liquid with a high alcohol content.
- ▶ Only use liquid with a high alcohol content in small quantities.
- ▶ Open the appliance door carefully.

⚠ WARNING – Risk of scalding!

The accessible parts of the appliance become hot during operation.

- ▶ Never touch these hot parts.
- ▶ Keep children at a safe distance.

Hot steam may escape when you open the appliance door. Whether or not you can see steam depends on its temperature.

- ▶ Do not stand too close to the appliance when opening the door.
- ▶ Open the appliance door carefully.
- ▶ Keep children at a safe distance.

If there is water in the cooking compartment when it is hot, this may create hot steam.

- ▶ Never pour water into the cooking compartment when the cooking compartment is hot.

⚠ WARNING – Risk of injury!

Scratched glass in the appliance door may develop into a crack.

- ▶ Do not use glass scrapers, sharp or abrasive cleaning aids, or harsh cleaning products.

The hinges on the appliance door move when the door is opened and closed, which could trap your fingers.

- ▶ Keep your hands away from the hinges.

Components inside the appliance door may have sharp edges.

- ▶ Wear protective gloves.

⚠ WARNING – Risk of electric shock!

Incorrect repairs are dangerous.

- ▶ Repairs to the appliance should only be carried out by trained specialist staff.
- ▶ Only use genuine spare parts when repairing the appliance.
- ▶ If the power cord of this appliance is damaged, it must be replaced by trained specialist staff.

If the insulation of the power cord is damaged, this is dangerous.

- ▶ Never let the power cord come into contact with hot appliance parts or heat sources.
- ▶ Never let the power cord come into contact with sharp points or edges.
- ▶ Never kink, crush or modify the power cord.

An ingress of moisture can cause an electric shock.

- ▶ Do not use steam- or high-pressure cleaners to clean the appliance.

If the appliance or the power cord is damaged, this is dangerous.

- ▶ Never operate a damaged appliance.
- ▶ Never operate an appliance with a cracked or fractured surface.
- ▶ Never pull on the power cord to unplug the appliance. Always unplug the appliance at the mains.

- If the appliance or the power cord is damaged, immediately unplug the power cord or switch off the fuse in the fuse box.
- "Call Customer Service." → *Page 22*
- Repairs to the appliance should only be carried out by trained specialist staff.

⚠ WARNING – Danger: Magnetism!
Permanent magnets are used in the control panel or in the controls. These may affect electronic implants, e.g. heart pacemakers or insulin pumps.
- Wearers of electronic implants must stay at least 10 cm away from the control panel.

1.5 Halogen bulb

Follow these instructions for appliances with halogen lamps.

⚠ WARNING – Risk of burns!
The bulbs in the cooking compartment get very hot. There is still a risk of burning for some time after they have been switched off.
- Do not touch the glass cover.
- Avoid contact with your skin when cleaning.

⚠ WARNING – Risk of electric shock!
When replacing the cooking compartment bulb, be aware that the bulb socket contacts are live.
- Before replacing the bulb, unplug the appliance from the mains or switch off the circuit breaker in the fuse box.

2 Preventing material damage

Follow these instructions to prevent material damage to your appliance, accessories or other objects in your kitchen.

2.1 General

Follow these instructions when using the appliance.

ATTENTION!
The presence of objects on the cooking compartment floor at over 50 °C will cause heat to build up. The baking and roasting times will no longer be correct and the enamel will be damaged.
- Do not cover the cooking compartment floor with any sort of foil or greaseproof paper.
- Do not place accessories on the cooking compartment floor.
- Do not place cookware on the cooking compartment floor if a temperature above 50 °C has been set.

If aluminium foil comes into contact with the door pane, it could cause permanent discolouration.
- Do not allow aluminium foil in the cooking compartment to come into contact with the door pane.

When the cooking compartment is hot, any water inside it will create steam. The change in temperature may cause damage.
- Never pour water into the cooking compartment when it is still hot.
- Never place cookware containing water on the cooking compartment floor.

The prolonged presence of moisture in the cooking compartment leads to corrosion.
- Allow the cooking compartment to dry after use.
- Do not keep moist food in the cooking compartment for a long time with the door closed.
- Do not store food in the cooking compartment.

Leaving the appliance to cool down with the door open will damage the front of neighbouring kitchen units over time.
- Always allow the cooking compartment to cool down with the door closed after cooking at high temperatures.
- Take care not to trap anything in the appliance door.
- Only leave the cooking compartment to dry with the door open if a lot of moisture was produced during operation.

Fruit juice dripping from the baking tray leaves stains that cannot be removed.
- When baking very juicy fruit flans, do not pack too much on the baking tray.
- If possible, use the deeper universal pan.

If the seal is very dirty, the appliance door will no longer close properly during operation. This may damage the front of adjacent kitchen units.
- Keep the seal clean at all times.
- Never operate the appliance if the seal is damaged or missing.

Sitting or placing objects on the appliance door may damage it.
- Do not place or hang objects on the appliance door.
- Do not place cookware or accessories on the appliance door.

With certain models, accessories may scratch the door pane when closing the appliance door.
- Always push accessories fully into the cooking compartment.

Carrying the appliance by the door handle could break it. The door handle cannot support the weight of the appliance.
- Do not carry or hold the appliance by the door handle.

3 Environmental protection and saving energy

Help protect the environment by using your appliance in a way that conserves resources and by disposing of reusable materials properly.

3.1 Disposing of packaging

The packaging materials are environmentally compatible and can be recycled.

- ▶ Sort the individual components by type and dispose of them separately.
  Information about current disposal methods are available from your specialist dealer or local authority.

3.2 Saving energy

If you follow these instructions, your appliance will use less power.

Only preheat the appliance if the recipe or the recommended settings tell you to do so.

- Not preheating the appliance can reduce the energy used by up to 20%.

Use dark-coloured, black-coated or enamelled baking tins.

- These types of baking tin absorb the heat particularly well.

Open the appliance door as little as possible during operation.

- This will maintain the temperature in the cooking compartment and eliminate the need for the appliance to reheat.

When baking multiple dishes, do so in succession or in parallel.

- The cooking compartment is heated after baking the first dish. This reduces the baking time for the second cake.

If the cooking time is relatively long, you can switch the appliance off 10 minutes before the cooking time ends.

- There will be enough residual heat to finish cooking the dish.

Remove any accessories that are not being used from the cooking compartment.

- Accessories that are not being used do not need to be heated.

Allow frozen food to defrost before cooking.

- This will save the energy that would otherwise be required to defrost it.

4 Familiarising yourself with your appliance

Familiarise yourself with the parts of your appliance.

4.1 Controls

You can use the control panel to configure all functions of your appliance and to obtain information about the operating status.

Note: On certain models, specific details such as colour and shape may differ from those pictured.

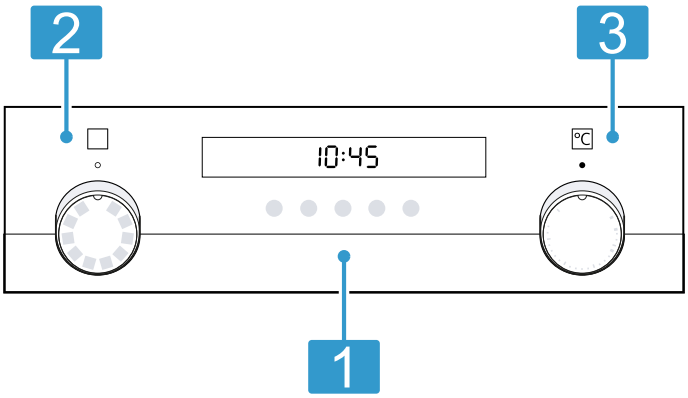

1 Buttons and display
The buttons are touch-sensitive surfaces. To select a function, simply press lightly on the relevant field.
The display shows symbols for active functions and the time-setting options.
→ *"Buttons and display", Page 6*

2 Function selector
Use the function selector to set the types of heating and other functions.
You can turn the function selector clockwise or anti-clockwise from the zero setting ○.
Depending on the appliance, the function selector can be pushed in. Press on the function selector to click it into or out of the zero setting ○.
→ *"Types of heating and functions", Page 6*

3 Temperature selector
Use the temperature selector to set the temperature for the type of heating and select settings for other functions.
You can only turn the temperature selector clockwise from the zero setting ● until it offers resistance. You cannot turn it any further than this.
Depending on the appliance, the temperature selector can be pushed in. Press on the temperature selector to click it into or out of the zero setting ●.
→ *"Temperature and setting levels", Page 7*

4.2 Buttons and display

You can use the buttons to set various functions for your appliance. The display shows the settings.
If a function is active, the corresponding symbol lights up in the display. The clock symbol ◷ only lights up when you change the time.

Symbol	Function	Use
◷	Time-setting options	Select the time ◷, timer 🔔, cooking time ⊢| and the end time |→|. To select the individual time-setting options, press the ◷ button several times. The arrows ◇ above and below a symbol indicate the function to which the setting in the display corresponds.
−	Minus	Decrease the setting values.
+	Plus	Increase the setting values.
kg	Weight	Select a weight for the programmes.
⊸	Childproof lock	Activate or deactivate the childproof lock.

4.3 Types of heating and functions

To ensure that you always use the right type of heating to cook your food, we have explained the differences and applications below.

Symbol	Type of heating	What it's used for/how it works
	3D hot air	Bake and roast on one or more levels. The fan distributes the heat from the ring-shaped heating element in the back wall evenly around the cooking compartment.

Symbol	Type of heating	What it's used for/how it works
	Hot air gentle	Cook selected dishes gently on one level without preheating. The fan distributes the heat from the ring-shaped heating element in the back wall evenly around the cooking compartment. The food is cooked in phases using residual heat. Select a temperature of between 120 °C and 230 °C. Always keep the appliance door closed when cooking. This type of heating is used to determine the energy consumption in air recirculation mode and the energy efficiency class.
	Pizza setting	Cook pizza or dishes that require a lot of heat from below. The bottom heating element and the ring-shaped heating element in the back wall heat the cooking compartment.
	Bottom heating	Final baking or cooking food in a bain marie. Heat is emitted from below.
	Full-surface grill	Grill flat items such as steak and sausages, or make toast. Gratinate food. The entire area underneath the grill element becomes hot.
	Hot air grilling	Roast poultry, whole fish and larger pieces of meat. The grill element and the fan switch on and off alternately. The fan circulates the hot air around the food.
	Top/bottom heating	Traditionally bake or roast on one level. This type of heating is ideal for cakes with moist toppings. The heat is emitted evenly from above and below. This type of heating is used to measure the energy consumption in the conventional mode.

Other functions

Here, you can find an overview of other functions of your appliance.

Symbol	Function	Use
	Rapid heating	Rapidly preheat the cooking compartment without accessories. → *"Rapid heating", Page 10*
	Oven light	Illuminate the cooking compartment without heating. → *"Lighting", Page 8*
P	Programme	Use programmed setting values for various types of food. → *"Programme", Page 12*

4.4 Temperature and setting levels

There are different settings for the types of heating and functions.

Note: For temperature settings above 250 °C, the appliance reduces the temperature to approx. 240 °C after approx. 10 minutes. If your appliance has the top/bottom heating or bottom heating types, this temperature reduction does not take place.

Symbol	Function	Use
●	Zero setting	The appliance does not heat up.
50–275	Temperature range	Set the temperature in the cooking compartment in °C.
1, 2, 3 or I, II, III	Grill settings	Set the grill settings for **Full-surface grill** and **Grill, small area** (depending on the appliance model). 1 = low 2 = medium 3 = high
P	Programme	Set the programme function.

Heat-up indicator

The appliance indicates when it is heating up.
When the appliance is heating, the symbol lights up on the display. This symbol goes out when heating is paused.

When you are preheating the appliance, the optimal time to place your food in the cooking compartment is when the symbol first goes out.

Note: Due to thermal inertia, the temperature displayed may differ slightly from the actual temperature inside the cooking compartment.

4.5 Cooking compartment

The functions in the cooking compartment make your appliance easier to use.

Shelf supports

The shelf supports in the cooking compartment enable you to place accessories at different heights.
→ *"Accessories", Page 8*
Your appliance has five shelf positions. The shelf positions are numbered from bottom to top.
You can remove the shelf supports, e. g. for cleaning.
→ *"Shelf supports", Page 17*

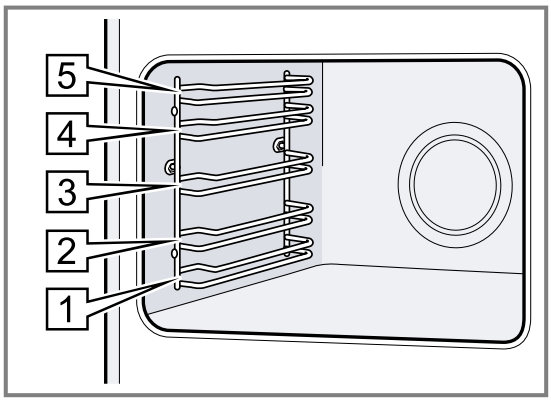

Lighting

The oven light lights up the cooking compartment. With most types of heating and functions, the lighting lights up during operation. When the function selector is turned to bring operation to an end, the lighting goes out.
The **Oven light** setting on the function selector can be used to switch on the light without heating.

Cooling fan

The cooling fan switches on and off depending on the appliance's temperature. The hot air escapes above the door.

ATTENTION!

Do not cover the ventilation slot above the appliance door. The appliance overheats.
- ▸ Ensure that the ventilation slots are unobstructed.

To ensure that the appliance cools down more quickly after operation, the cooling fan continues to run for a certain period afterwards.

Appliance door

If you open the appliance door during operation, the operation continues.

5 Accessories

Use original accessories. These have been made especially for your appliance.
Note: Accessories may become deformed if they get hot. Deformation has no effect on function. As the accessory cools down, it will regain its original shape.

The accessories supplied may differ depending on the appliance model.

Accessories		Use
Wire rack	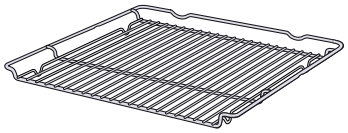	■ Cake tins ■ Ovenproof dishes ■ Cookware ■ Meat, e.g. roasting joints or steak ■ Frozen meals
Universal pan	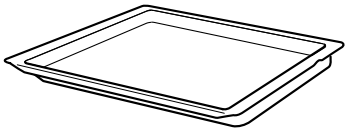	■ Moist cakes ■ Baked items ■ Bread ■ Large roasts ■ Frozen meals ■ Catching dripping liquids, e.g. fat when grilling food on the wire rack.

5.1 Locking function

The locking function prevents the accessories from tilting when they are pulled out.
You can pull out the accessories approximately halfway without them tipping. The accessories must be inserted into the cooking compartment correctly for the tilt protection to work properly.

5.2 Sliding accessories into the cooking compartment

Always slide accessories into the cooking compartment correctly. This is the only way to ensure that accessories can be pulled out approximately halfway without tipping.
1. Turn the accessories so that the notch a is at the rear and is facing downwards.
2. Insert accessories between the two guide rods for the shelf position.

Wire rack	Insert the wire rack with the open side facing the appliance door and the curved lip ⌣ facing downwards. 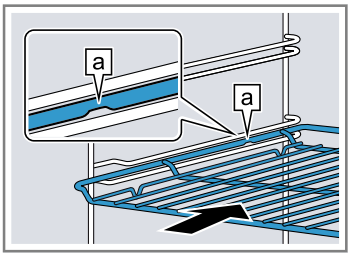
Baking tray E.g. universal pan or baking tray	Slide the tray, e.g. the universal pan, in with the sloping edge b facing the appliance door. 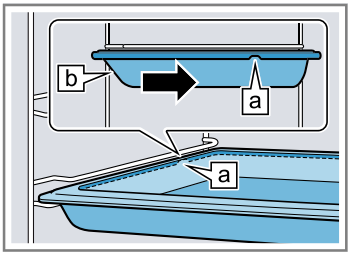

3. Push the accessory all the way in, making sure that it does not touch the appliance door.

Note: Take any accessories that you will not be using out of the cooking compartment while the appliance is in operation.

Combining accessories

You can combine the wire rack with the universal pan to catch any liquid that drips down.

1. Place the wire rack on the universal pan so that both spacers a are on the rear edge of the universal pan.
2. Insert the universal pan between the two guide rods for a shelf position. In so doing, the wire rack is on top of the upper guide rod.

Wire rack on universal pan	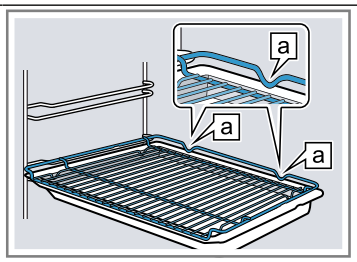

5.3 Other accessories

You can purchase other accessories from our after-sales service, specialist retailers or online.
You will find a comprehensive range of products for your appliance in our brochures and online: www.siemens-home.bsh-group.com
Accessories vary from one appliance to another. When purchasing accessories, always quote the exact product number (E no.) of your appliance.
You can find out which accessories are available for your appliance in our online shop or from our after-sales service.

6 Before using for the first time

Configure the settings for initial start-up. Clean the appliance and accessories.

6.1 Initial use

You need to make settings for initial use before you can use your appliance.

Setting the time on the clock

Once the appliance has been connected to the mains or following a power failure, the time flashes on the display. The time starts at "12:00". Set the current time.

Requirement: The function selector must be set to the "Off" position ○.

1. Use the − or + button to set the time.
2. Press the ◷ button.

✔ The time that is set appears on the display.

Tip: You can go to the "basic settings" → *Page 14* to specify whether or not the time should be shown on the display.

6.2 Cleaning the appliance before using it for the first time

Clean the cooking compartment and accessories before using the appliance to prepare food for the first time.

1. Remove any accessories and leftover packaging, such as polystyrene pellets, from the cooking compartment.
2. Before heating the appliance, wipe the smooth surfaces in the cooking compartment with a soft, damp cloth.
3. Keep the room ventilated while the appliance is heating.
4. Set the type of heating and temperature.
   → *"Basic operation", Page 10*

Type of heating	3D hot air
Temperature	Maximum
Cooking time	1 hour

5. Switch off the appliance after the specified cooking time.
6. Wait until the cooking compartment has cooled down.
7. Clean the smooth surfaces with soapy water and a dish cloth.

8. Clean the accessories using soapy water and a dish cloth or soft brush.

7 Basic operation

You can find out everything you need to know about operating your appliance here.

7.1 Switching on the appliance

- ▶ Turn the function selector to any position other than the "Off" position ○.
- ✔ The appliance is switched on.

7.2 Switching off the appliance

- ▶ Turn the function selector to the "Off" position ○.
- ✔ The appliance is switched off.

7.3 Setting the type of heating and temperature

1. Use the function selector to set the type of heating.
2. Use the temperature selector to set the temperature or grill setting.
- ✔ The appliance starts heating after a few seconds.
3. When your food is ready, switch off the appliance.

Tips

- The most suitable type of heating for your food can be found in the description of the type of heating. → *"Types of heating and functions", Page 6*
- You can also set a cooking time and end time on the appliance. → *"Time-setting options", Page 10*

Changing the type of heating

You can change the type of heating at any time.

- ▶ Use the function selector to set the required type of heating.

Changing the temperature

You can change the temperature at any time.

- ▶ Use the temperature selector to set the required temperature.

8 Rapid heating

To save time, you can use rapid heat-up to shorten the preheat time.
Only use rapid heat-up when a temperature of over 100 °C has been set.
After rapid heat-up, it is best to use the following types of heating:

- **3D hot air**

8.1 Setting rapid heating

To ensure an even cooking result, do not place the food in the cooking compartment until rapid heating has come to an end.

1. Use the function selector to select rapid heating.
2. Use the temperature selector to set the required temperature.
- ✔ Rapid heating starts after a few seconds.
- ✔ When the rapid heating process ends, an audible signal sounds and the heating indicator goes out.
3. Use the function selector to set a suitable type of heating.
4. Place the food in the cooking compartment.

9 Time-setting options

Your appliance has different time-setting options, with which you can control its operation.

9.1 Overview of the time-setting options

With the ◷ button, select the different time-setting options.

Time-setting option	Use
Timer	The timer can be set independently of the appliance when it is in operation. It does not affect the appliance.
Cooking time	If you set a cooking time, operation of the appliance stops automatically once this time has elapsed.
End time	For the cooking time, you can set the time at which operation ends. The appliance starts up automatically so that it finishes cooking at the required time.
Time ◷	You can set the time.

9.2 Setting the timer

The timer runs independently of the appliance when it is in operation. The timer can be set when the appliance is switched on or off, up to 23 hours and 59

minutes. The timer has its own audible signal so that you can tell whether it is the timer or a cooking time which has elapsed.

1. Press the ◷ button repeatedly until 🔔 is highlighted in the display.
2. Use the — or + button to set the timer duration.

Button	Default value
—	5 minutes
+	10 minutes

The timer duration can be set in 30-second increments up to 10 minutes. Above 10 minutes, the time increments become longer the higher the value.

✔ The timer starts and the timer duration begins to count down after a few seconds.
✔ An audible signal sounds and the timer duration is zero in the display when the timer duration has elapsed.

3. Once the timer duration has elapsed:
   – Press any button to switch off the timer.

Changing the timer

You can change the timer duration at any time.

Requirement: 🔔 is highlighted on the display.

▸ Use the — or + button to change the timer duration.
✔ The appliance applies the change after a few seconds.

Cancelling the timer

You can cancel the timer duration at any time.

Requirement: 🔔 is highlighted on the display.

▸ Use the — button to reset the timer duration to zero.
✔ After a few seconds, the appliance applies the change and 🔔 goes out.

9.3 Setting the cooking time

You can set a cooking time for operation of up to 23 hours 59 minutes.

Requirement: The type of heating and temperature or setting are set.

1. Press the ◷ button repeatedly until ⊢| is highlighted in the display.
2. Use the — or + button to set the cooking time.

Button	Default value
—	10 minutes
+	30 minutes

The cooking time can be set in 1-minute increments up to 1 hour, and then in 5-minute increments.

✔ The appliance starts heating and the cooking time counts down after a few seconds.
✔ If the cooking time has elapsed, an audible signal sounds and the display shows the cooking time as zero.

3. When the cooking time has elapsed:
   – Press any button to end the audible signal before it sounds.
   – To set a cooking time again, press the + button.
   – When your food is ready, switch off the appliance.

Changing the cooking time

You can change the cooking time at any time.

Requirement: ⊢| is highlighted on the display.

▸ Change the cooking time using the — or + button.
✔ The appliance applies the change after a few seconds.

Cancelling the cooking time

You can cancel the cooking time at any time.

Requirement: ⊢| is highlighted on the display.

▸ Reset the cooking time to zero using the — button.
✔ After a few seconds, the appliance applies the change and continues to heat without a cooking time.

9.4 Setting the end time

You can delay the time at which cooking is due to finish by up to 23 hours and 59 minutes.

Notes

- The end time cannot be set for types of heating with grill function.
- In order to achieve a good cooking result, do not delay the end time once the appliance is already in operation.
- Food will spoil if you leave it in the cooking compartment too long.

Requirements

- The type of heating and temperature or setting are set.
- A cooking time is set.

1. Press the ◷ button repeatedly until |→ is highlighted in the display.
2. Press the — or + button.

✔ The display shows the calculated end time.

3. Use the — or + button to delay the end time.

✔ After a few seconds, the appliance applies the setting and the display shows the set end time.
✔ Once the calculated start time has been reached, the appliance starts heating up and the cooking time starts counting down.
✔ Once the time has elapsed, an audible signal sounds and the display shows the cooking time as zero.

4. When the cooking time has elapsed:
   – Press any button to end the signal prematurely.
   – To set another cooking time, press the + button.
   – When your food is ready, switch off the appliance.

Changing the end time

In order to achieve a good cooking result, you can only change the set end time before operation starts and the cooking time starts counting down.

Requirement: |→ is highlighted on the display.

▸ Use the — or + button to delay the end time.
✔ The appliance applies the change after a few seconds.

Cancelling the end time

You can delete the set end at any time.

Requirement: |→ is highlighted on the display.

- ▸ Reset the end time to the current time plus the set cooking time using the — button.
- ✔ After a few seconds, the appliance applies the change and starts heating up. The cooking time counts down.

9.5 Setting the time on the clock

Once the appliance has been connected to the mains or following a power failure, the time flashes on the display. The time starts at "12:00". Set the current time.

Requirement: The function selector must be set to the "Off" position ○.

1. Use the — or + button to set the time.
2. Press the ◷ button.

✔ The time that is set appears on the display.

Tip: You can go to the "basic settings" → *Page 14* to specify whether or not the time should be shown on the display.

Changing the time on the clock

You can change the time on the clock at any time.

Requirement: The function selector must be set to the "Off" position ○.

1. Press the ◷ button repeatedly until ◷ is highlighted in the display.
2. Use the — or + button to change the time.

✔ The appliance applies the change after a few seconds.

10 Programme

The programmes help you to use your appliance to prepare different dishes by selecting the optimum settings automatically.

10.1 Cookware for programmes

You should therefore use heat-resistant cookware that is suitable for temperatures up to 300 °C.
Glass or glass ceramic cookware is best. The joint should cover approx. two thirds of the cookware base.

Cookware made from the following material is not suitable:

- Bright, shiny aluminium
- Unglazed clay
- Plastic or plastic handles

10.2 Programme table

The programme numbers are assigned to specific foods.
The weight can be set to between 0.5 kg and 2.5 kg.

No.	Food	Cookware	Weight setting	Add liquid	Shelf positions	Information
01	**Chicken, unstuffed** Ready to cook, seasoned	Roasting dish with glass lid	Chicken weight	No	2	Place in the cookware with the breast facing up
02	**Turkey breast** Whole, seasoned	Roasting dish with glass lid	Turkey breast weight	Cover the bottom of the roasting dish and add up to 250 g vegetables if you wish	2	Do not sear the meat beforehand
03	**Vegetable stew** Vegetarian	Deep roasting dish with lid	Total weight	As per recipe	2	Cut vegetables that take longer to cook (e.g. carrots) into smaller pieces than vegetables that take less time to cook (e.g. tomatoes)
04	**Goulash** Diced beef or pork, with vegetables	Deep roasting dish with lid	Total weight	As per recipe	2	Place the meat at the bottom and cover with vegetables Do not sear the meat beforehand
05	**Meat loaf, fresh** Minced beef, pork or lamb	Roasting dish with lid	Roast weight	No	2	-

No.	Food	Cookware	Weight setting	Add liquid	Shelf positions	Information
06	**Pot-roasted beef** E.g. prime rib, shoulder, rump or marinated beef roast	Roasting dish with lid	Weight of meat	Almost cover the meat with liquid	2	Do not sear the meat beforehand
07	**Beef olives** Stuffed with vegetables or meat	Roasting dish with lid	Total weight of all the stuffed beef olives	Add stock, water or another liquid to the dish until the beef olives are almost covered	2	Do not sear the meat beforehand
08	**Leg of lamb, well done** Boned, seasoned	Roasting dish with lid	Weight of meat	Cover the bottom of the roasting dish and add up to 250 g vegetables if you wish	2	Do not sear the meat beforehand
09	**Joint of veal, lean** E.g. tenderloin or eye	Roasting dish with lid	Weight of meat	Cover the bottom of the roasting dish and add up to 250 g vegetables if you wish	2	Do not sear the meat beforehand
10	**Pork neck joint** Boned, seasoned	Roasting dish with glass lid	Weight of meat	Cover the bottom of the roasting dish and add up to 250 g vegetables if you wish	2	Do not sear the meat beforehand

10.3 Preparing food for the programme

Use fresh and, ideally, chilled food.

1. Weigh the food.
   The weight of the food is required in order to correctly set the programme.
2. Add the food to the cookware.
3. Place the cookware onto the wire rack.
   Always place the cookware into the cooking compartment while it is cold.

10.4 Setting a programme

The appliance selects the optimal type of heating, temperature and cooking time. All you need to do is set the weight.

Notes

- You can set the weight only in the intended area.
- After the programme starts, you can no longer change the programme and the weight.

1. Use the function selector to set **Programme** [P].
2. Use the temperature selector to set **Programme** [P].
3. Use the — or + button to set the required programme.
4. Press the kg button.
5. Use the — or + button to set the weight of your food. Always set the next higher weight.
   - The display shows the calculated cooking time. The cooking time cannot be changed.
   - For some programmes, the ◷ button can be used to delay the end.
     → *"Setting the end time", Page 11*
   - To change the programme, press the kg button.

✔ After a few seconds, the programme starts and the cooking time counts down.

✔ If the programme has ended, an audible signal sounds and the display shows the cooking time as zero.

6. When the programme ends:
   - Press any button to end the audible signal prematurely.
   - To set a cooking time for further cooking, press the + button. The appliance continues to heat using the programme settings.
   - When your food is ready, switch off the appliance.

11 Childproof lock

You can secure your appliance to prevent children from accidentally switching it on or changing the settings.

Notes

- You can go to the "basic settings" → *Page 14* to specify whether you want the option to set the childproof lock.
- After a power cut, the childproof lock is deactivated.

11.1 Activating and deactivating the childproof lock

Requirement: The function selector must be set to the "Off" position ○.

- ▶ To activate the childproof lock, press and hold the 🔑 button until 🔑 appears in the display.
  - – To deactivate the childproof lock, press and hold the 🔑 button until 🔑 goes out in the display.

12 Basic settings

You can configure the appliance to meet your needs.

12.1 Overview of the basic settings

Here you can find an overview of the basic settings and factory settings. The basic settings depend on the features of your appliance.

Display	Basic setting	Selection
c1	Time display	0 = hide the time 1 = display the time[1]
c2	Signal duration upon completion of a cooking time or timer period	1 = 10 seconds 2 = 30 seconds[1] 3 = 2 minutes
c3	Button tone when pressing a button	0 = off 1 = on[1]
c4	Cooling fan run-on time	1 = short 2 = medium 3 = long[1] 4 = extra long
c5	Waiting time until a setting is applied	1 = 3 seconds[1] 2 = 6 seconds 3 = 10 seconds
c6	Childproof lock can be adjusted	0 = no 1 = yes[1]

[1] Factory setting (may vary according to model)

12.2 Changing basic settings

Requirement: The appliance is switched off.

1. Press and hold the 🕒 button for approximately four seconds.
   - ✔ The first basic setting appears in the display, e.g. c11.
2. Use the − or + button to change the setting.
3. Use the 🕒 button to switch to the next basic setting.
4. To save the changes, press and hold the 🕒 button for approx. four seconds.

Note: Following a power failure, the factory basic settings are restored.

12.3 Discarding changes to the basic settings

- ▶ Turn the function selector.
- ✔ All changes are discarded and not saved.

13 Cleaning and servicing

To keep your appliance working efficiently for a long time, it is important to clean and maintain it carefully.

13.1 Cleaning products

In order to avoid damaging the various oven surfaces on the appliance, do not use unsuitable cleaning products.

⚠ WARNING – Risk of electric shock!

An ingress of moisture can cause an electric shock.

- ▶ Do not use steam- or high-pressure cleaners to clean the appliance.

ATTENTION!

Unsuitable cleaning products may damage the surfaces of the appliance.

- ▶ Do not use harsh or abrasive cleaning products.
- ▶ Do not use cleaning products with a high alcohol content.
- ▶ Do not use hard scouring pads or cleaning sponges.
- ▶ Do not use any special cleaners for cleaning the appliance while it is hot.

Using oven cleaner in a hot cooking compartment damages the enamel.

- ▶ Never use oven cleaner in the cooking compartment when it is still warm.
- ▶ Remove all food remnants from the cooking compartment and the appliance door before you next heat up the appliance.

New sponge cloths contain residues from production.

- ▶ Wash new sponge cloths thoroughly before use.

Suitable cleaning agents

Only use cleaning agents that are suitable for the different surfaces on your appliance.

Follow the instructions on cleaning the appliance.
→ *"Cleaning the appliance", Page 16*

Appliance front

Surface	Suitable cleaning agents	Notes
Stainless steel	■ Hot soapy water ■ Special stainless steel cleaning products suitable for hot surfaces	To prevent corrosion, remove any limescale, grease, starch or albumin (e.g. egg white) stains on stainless steel fronts immediately. Apply a thin layer of the stainless steel cleaning product with a soft cloth.
Plastic or painted surfaces E.g. control panel	■ Hot soapy water	Do not use glass cleaner or a glass scraper.

Appliance door

Area	Suitable cleaning agents	Notes
Door panels	■ Hot soapy water	Do not use a glass scraper or a stainless steel wool. **Tip:** Remove the door panels in order to clean them thoroughly. → *"Appliance door", Page 17*
Door cover	■ Made of stainless steel: Stainless steel cleaner ■ Made of plastic: Hot soapy water	Do not use glass cleaner or a glass scraper. **Tip:** Remove the door cover for thorough cleaning. → *"Appliance door", Page 17*
Door handle	■ Hot soapy water	To avoid permanent stains, remove descaling agents from the door handle immediately.
Door seal	■ Hot soapy water	Do not remove or scrub.

Cooking compartment

Area	Suitable cleaning agents	Notes
Enamel surfaces	■ Hot soapy water ■ Vinegar water ■ Oven cleaner	Soak any heavily soiled areas and use a brush or steel wool. Leave the appliance door open to dry the cooking compartment after cleaning it. **Notes** ■ Enamel burns at very high temperatures, causing minor discolouration. The functionality of your appliance is not affected by this. ■ The edges of thin trays cannot be completely enamelled and may be rough. This does not impair corrosion protection. ■ Food residues will leave a white coating on the enamel surfaces. The coating does not pose a health risk. The functionality of your appliance is not affected by this. You can remove residues with lemon juice.
Glass cover for the oven light	■ Hot soapy water	Use oven cleaner to remove very heavy soiling.
Rails	■ Hot soapy water	Soak any heavily soiled areas and use a brush or steel wool. **Tip:** Remove the shelf supports for cleaning. → *"Shelf supports", Page 17*
Accessorles	■ Hot soapy water ■ Oven cleaner	Soak any heavily soiled areas and use a brush or steel wool. Enamelled accessories are dishwasher-safe.

13.2 Cleaning the appliance

In order to avoid damaging the appliance, you must clean your appliance only as specified, and with suitable cleaning products.

⚠ WARNING – Risk of burns!

The appliance gets very hot.

- ▸ Never touch the inside surfaces of the cooking compartment or the heating elements while they are hot.
- ▸ Always allow the appliance to cool down.
- ▸ Keep children at a safe distance.

⚠ WARNING – Risk of fire!

Loose food remnants, fat and meat juices may catch fire.

- ▸ Before using the appliance, remove the worst of the food residues and remnants from the cooking compartment, heating elements and accessories.

Requirement: Read the information on cleaning products.

→ *"Cleaning products", Page 15*

1. Clean the appliance using hot soapy water and a dish cloth.
   – For some surfaces, you can use alternative cleaning agents.
   → *"Suitable cleaning agents", Page 15*
2. Dry with a soft cloth.

14 Cleaning aid humidClean

The cleaning aid is a quick alternative for occasionally cleaning the cooking compartment. The cleaning aid softens dirt by vaporising the soapy water. The dirt can then be removed more easily.

14.1 Setting the cleaning aid

⚠ WARNING – Risk of scalding!

If there is water in the cooking compartment when it is hot, this may create hot steam.

- ▸ Never pour water into the cooking compartment when the cooking compartment is hot.

Requirement: The cooking compartment has cooled down completely.

1. Remove the accessories from the cooking compartment.
2. Mix 0.4 litres water with a drop of washing-up liquid and pour into the middle of the cooking compartment floor.
   Do not use distilled water.
3. Use the function selector to set the **Bottom heating** type of heating.
4. Use the temperature selector to set 80 °C.
5. Press the ⏲ button repeatedly until ⏲ is highlighted in the display.
6. Use the − or + button to set the time to four minutes.
   ✔ After a few seconds, the appliance starts heating and the time counts down.
   ✔ Once the time has elapsed, an audible signal sounds and the display shows the time as zero.
7. Switch off the appliance and leave the cooking compartment to cool down for 20 minutes.

14.2 Recleaning the cooking compartment

ATTENTION!

The prolonged presence of moisture in the cooking compartment leads to corrosion.

- After using the cleaning aid, wipe the cooking compartment clean and allow it to dry fully.

Requirement: The cooking compartment has cooled down.

1. Open the appliance door and remove the remaining water with an absorbent sponge cloth.
2. Clean the smooth surfaces in the cooking compartment with a dish cloth or a soft brush. Remove stubborn food remnants using a stainless steel scouring pad.
3. Remove limescale with a cloth soaked in vinegar. Then wipe with clean water and rub dry with a soft cloth (including under the door seal).
4. Once the cooking compartment is cleaned sufficiently:
   - To allow the cooking compartment to dry, open the appliance door to the stop position (approx. 30°) and leave it open for approx. one hour.
   - To dry the cooking compartment quickly, heat up the appliance for approx. five minutes at **3D hot air** and 50 °C while the door is open.

15 Shelf supports

To clean the rails and the cooking compartment, or to replace the rails, you can remove these.

15.1 Detaching the shelf supports

⚠ WARNING – Risk of burns!

The shelf supports get very hot

- Never touch the shelf supports when hot.
- Always allow the appliance to cool down.
- Keep children at a safe distance.

1. Lift the rail forwards slightly ① and detach it ②.
2. Pull the whole rail to the front ③ and remove it.

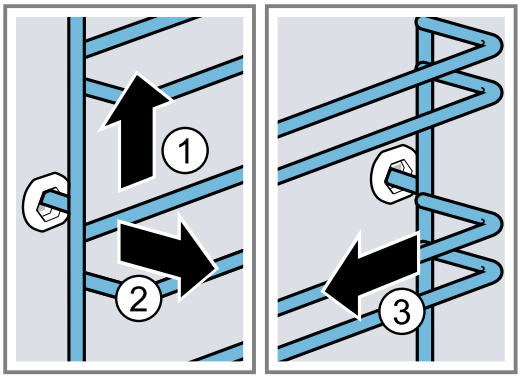

3. Clean the rail.
   → *"Cleaning products", Page 15*

15.2 Attaching the shelf supports

Notes

- The rails only fit on the right or left.
- For both rails, ensure that the curved rods are at the front.

1. First, push the rail into the middle of the rear socket ① until the rail rests against the cooking compartment wall, and then push this back ②.
2. Push the rail into the front socket ③ until the rail also rests against the cooking compartment wall, and then press this downwards ④.

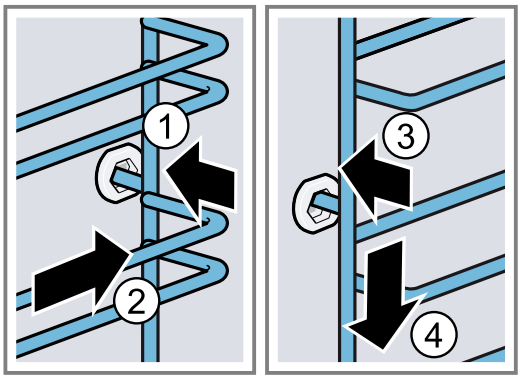

16 Appliance door

To ensure that your appliance retains its appearance and remains fully functioning for a long time, you can detach the appliance door and clean it.

16.1 Detaching the appliance door

⚠ WARNING – Risk of injury!

Components inside the appliance door may have sharp edges.

- Wear protective gloves.

The hinges on the appliance door move when the door is opened and closed, which could trap your fingers.

- Keep your hands away from the hinges.

1. Open the appliance door fully.

2. ⚠ **WARNING – Risk of injury!**
When the hinges are not secured, they can snap shut with great force.
▸ Make sure that the locking levers are always either fully closed or (when detaching the oven door) fully open.
Open the locking levers on the left- and right-hand hinges.

Locking levers opened	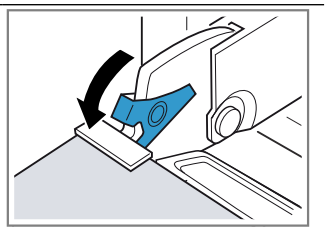 The hinge is now secured and cannot snap shut.
Locking levers closed	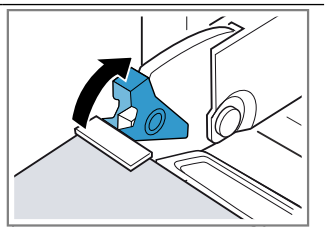 The appliance door is secured and cannot be detached.

✔ The locking levers are open. The hinges are now secured and cannot snap shut.

3. Close the appliance door fully ①. Grab hold of the appliance door with both hands (on the left and right) and pull it upwards and out ②.

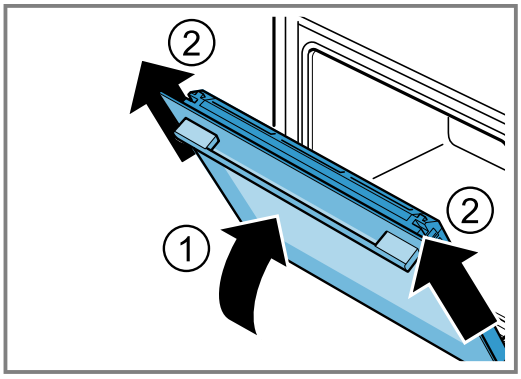

4. Carefully place the appliance door on a level surface.

16.2 Attaching the appliance door

⚠ **WARNING – Risk of injury!**
The hinges on the appliance door move when the door is opened and closed, which could trap your fingers.
▸ Keep your hands away from the hinges.
When the hinges are not secured, they can snap shut with great force.
▸ Make sure that the locking levers are always either fully closed or (when detaching the oven door) fully open.

1. Slide the appliance door straight onto the two hinges ①. Slide the appliance door on as far as it will go.
2. Open the appliance door fully.
3. Close the locking levers on the left- and right-hand hinges ②.

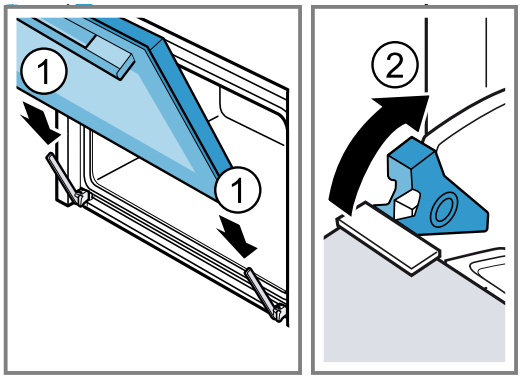

✔ The locking levers are closed. The appliance door is secured and cannot be detached.
4. Close the appliance door.

16.3 Removing the door panes

⚠ **WARNING – Risk of injury!**
The hinges on the appliance door move when the door is opened and closed, which could trap your fingers.
▸ Keep your hands away from the hinges.
Components inside the appliance door may have sharp edges.
▸ Wear protective gloves.

1. Open the appliance door fully.
2. Open the locking levers on the left- and right-hand hinges ①.
✔ The locking levers are open. The hinges are now secured and cannot snap shut.
3. Close the appliance door fully ②.

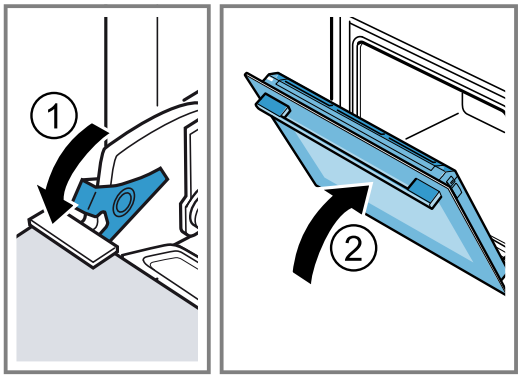

4. Push on the left- and right-hand side of the door cover from the outside ① until it is released.

5. Remove the door cover ②.

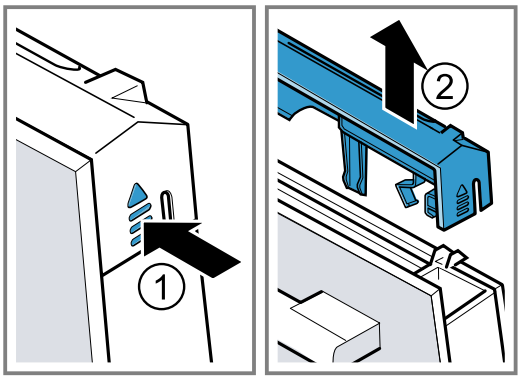

6. Lift out the inner pane and set it down carefully on a flat surface.

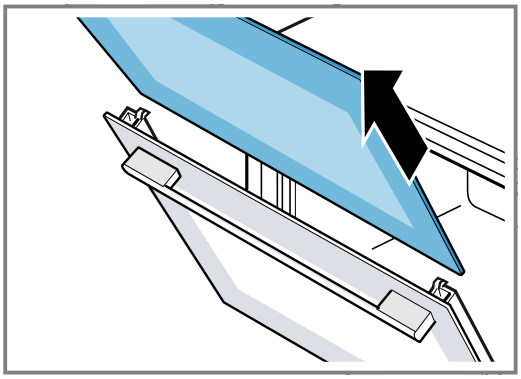

7. If necessary, you can remove the condensate trough for cleaning.
   – Open the appliance door.
   – Tilt the condensate trough upwards and remove it.

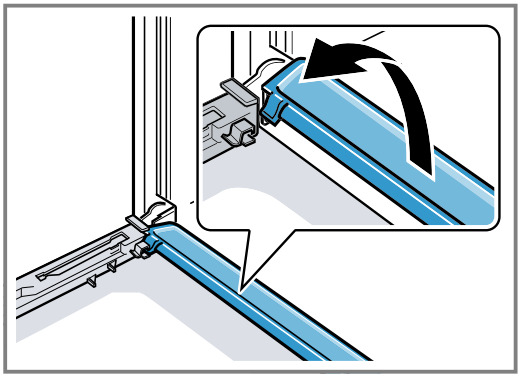

8. **⚠ WARNING – Risk of injury!**
   Scratched glass in the appliance door may develop into a crack.
   ▸ Do not use glass scrapers, sharp or abrasive cleaning aids, or harsh cleaning products.
   Clean the removed door panes on both sides with glass cleaner and a soft cloth.
9. Clean the condensate trough with a cloth and hot soapy water.
10. Clean the appliance door.
    → *"Suitable cleaning agents", Page 15*
11. Dry the door panes and refit them.
    → *"Fitting the door panes", Page 19*

16.4 Fitting the door panes

⚠ WARNING – Risk of injury!
The hinges on the appliance door move when the door is opened and closed, which could trap your fingers.
▸ Keep your hands away from the hinges.
Components inside the appliance door may have sharp edges.
▸ Wear protective gloves.

1. Open the appliance door fully.
2. Place the condensate trough vertically in the retainer [a] and turn it downwards.

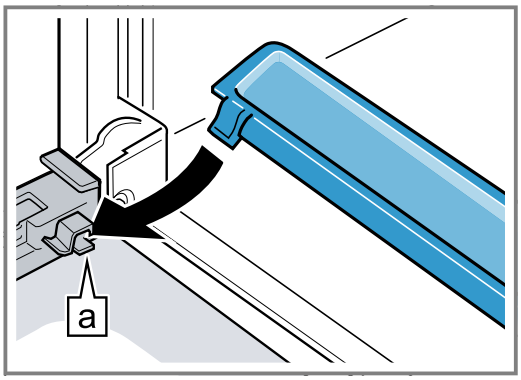

3. Slide the inner pane into the left- and right-hand retainers [a].

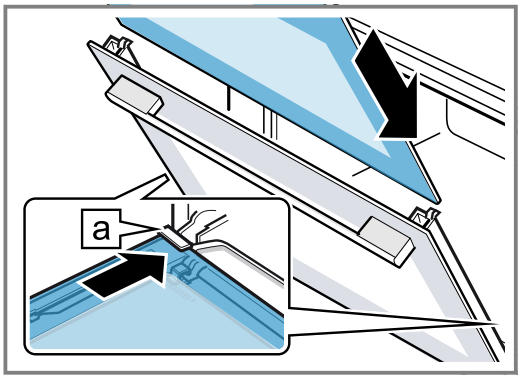

4. Push the inner pane upwards until it is in the left- and right-hand retainers [a].

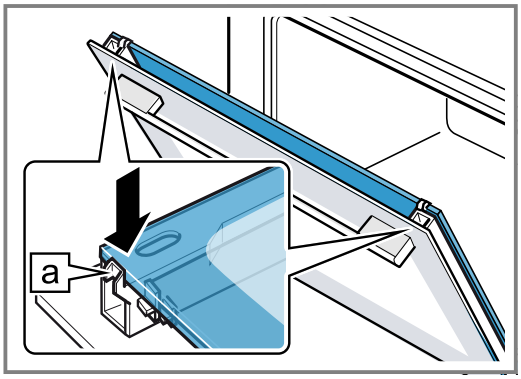

5. Put the door cover in position ① and push down on it until you hear it click into place.
6. Open the appliance door fully.

7. Close the locking levers on the left- and right-hand hinges ②.

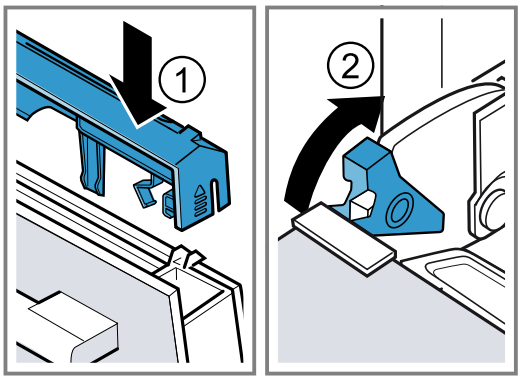

✔ The locking levers are closed. The appliance door is secured and cannot be detached.

8. Close the appliance door.

Note: Do not use the cooking compartment again until the door panes have been correctly fitted.

17 Troubleshooting

You can rectify minor faults on your appliance yourself. Read the troubleshooting information before contacting after-sales service. This will avoid unnecessary costs.

⚠ **WARNING – Risk of injury!**
Improper repairs are dangerous.
- ▸ Repairs to the appliance should only be carried out by trained specialist staff.
- ▸ If the appliance is defective, call Customer Service.

⚠ **WARNING – Risk of electric shock!**
Incorrect repairs are dangerous.
- ▸ Repairs to the appliance should only be carried out by trained specialist staff.
- ▸ Only use genuine spare parts when repairing the appliance.
- ▸ If the power cord of this appliance is damaged, it must be replaced by trained specialist staff.

17.1 Malfunctions

Fault	Cause and troubleshooting
The appliance is not working.	The circuit breaker is faulty. ▸ Check the circuit breaker in the fuse box.
	There has been a power cut. ▸ Check whether the lighting in your kitchen or other appliances are working.
The appliance does not switch off fully at the end of a cooking time.	At the end of a cooking time, the appliance stops heating up. The oven light and cooling fan do not switch off. For types of heating with recirculation, the fan continues to run in the back wall of the cooking compartment. ▸ Turn the function selector to the off position. ✔ The appliance is switched off. ✔ The oven light and the fan in the back wall are switched off. ✔ The cooling fan switches off automatically as soon as the appliance has cooled down.
The time flashes in the display.	There has been a power cut. ▸ Reset the time. → *"Setting the time on the clock", Page 12*
The time does not appear in the display when the appliance is switched off.	The basic setting has been changed. ▸ Change the basic setting for the time display. → *"Basic settings", Page 14*
🔑 lights up in the display and no settings can be made on the appliance.	Childproof lock is activated. ▸ Use the 🔑 button to deactivate the childproof lock. → *"Childproof lock", Page 14*

Fault	Cause and troubleshooting
A message with E appears in the display, e.g. E05-32.	Electronics fault **1.** Press the ⏲ button. – If required, reset the time. ✔ If the fault was a one-off, the error message disappears. **2.** If the error message appears again, call the after-sales service. Quote the exact error message and the E no. of your appliance. → *"Customer Service", Page 22*

17.2 Replacing the oven light bulb

If the light in the cooking compartment fails, change the oven light bulb.

Note: Heat-resistant, 25-watt, 230 V halogen bulbs are available from the after-sales service or specialist retailers. Only use these bulbs. Hold the new halogen bulbs only with a clean, dry towel. This increases the service life of the bulb.

⚠ WARNING – Risk of burns!

The appliance gets very hot.

- ▸ Never touch the inside surfaces of the cooking compartment or the heating elements while they are hot.
- ▸ Always allow the appliance to cool down.
- ▸ Keep children at a safe distance.

⚠ WARNING – Risk of electric shock!

When changing the bulb, the bulb socket contacts are live.

- ▸ Before replacing the bulb, unplug the appliance from the mains or switch off the circuit breaker in the fuse box.

Requirements

- The appliance is disconnected from the power supply.
- The cooking compartment has cooled down.
- You have a new halogen bulb to replace the old one.

1. Place a tea towel in the cooking compartment to prevent damage.
2. Turn the glass cover anti-clockwise to remove it ①.
3. Pull out the halogen bulb without turning it ②.

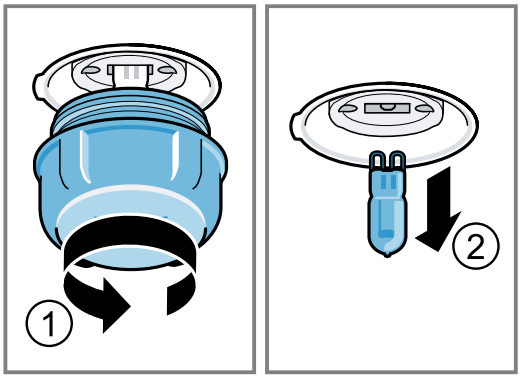

4. Insert the new halogen lamp and press it firmly into the socket.
   Make sure the pins are positioned correctly.
5. Depending on the appliance model, the glass cover may have a sealing ring. Put the sealing ring in position.
6. Screw the glass cover on.
7. Take the tea towel out of the cooking compartment.
8. Connect the appliance to the power supply.

18 Disposal

Find out here how to dispose of old appliances correctly.

18.1 Disposing of old appliance

Valuable raw materials can be reused by recycling.

1. Unplug the appliance from the mains.
2. Cut through the power cord.
3. Dispose of the appliance in an environmentally friendly manner.
   Information about current disposal methods are available from your specialist dealer or local authority.



This appliance is labelled in accordance with European Directive 2012/19/EU concerning used electrical and electronic appliances (waste electrical and electronic equipment - WEEE).
The guideline determines the framework for the return and recycling of used appliances as applicable throughout the EU.

19 Customer Service

If you have any queries on use, are unable to rectify faults on the appliance yourself or if your appliance needs to be repaired, contact Customer Service.
You can solve many problems yourself by consulting the information on troubleshooting in these instructions or on our website. If this is not the case, contact our after-sales service.
We will always find an appropriate solution and try to avoid unnecessary visits being made by a Customer Service technician.
With any warranty claims, we will make sure that your appliance is repaired by trained after-sales technicians using genuine spare parts, including after the manufacturer's warranty has expired.
Detailed information on the warranty period and terms of warranty in your country is available from our after-sales service, your retailer or on our website.
If you contact Customer Service, you will require the product number (E-Nr.) and the production number (FD) of your appliance.

The contact details for Customer Service can be found in the enclosed Customer Service directory or on our website.

19.1 Product number (E-Nr.) and production number (FD)

You can find the product number (E-Nr.) and the production number (FD) on the appliance's rating plate. You will see the rating plate with these numbers if you open the appliance door.



Make a note of your appliance's details and the Customer Service telephone number to find them again quickly.

20 How it works

Here, you can find the ideal settings for various types of food as well as the best accessories and cookware. We have perfectly tailored these recommendations to your appliance.

20.1 Cooking tips

Observe this information when preparing food.
- The temperature and cooking time depend on the amount of food and the recipe. Settings ranges are specified for this reason. Try using the lower values to start with.
- The setting values apply to food placed in the cooking compartment while the cooking compartment is still cold.
- Remove any accessories that are not being used from the cooking compartment.

20.2 Notes on baking

When baking, use the shelf positions indicated.

Baking on one level	Height
Deep baked goods or tin on wire rack	2
Flat baked goods or goods in a baking tray	3

Baking on two levels	Height
Universal pan Baking tray	3 1
Baking tins/dishes on the wire rack: First wire rack Second wire rack	Height 3 1
Baking tray Universal pan Baking tray	5 3 1

Notes
- When baking on several layers, always use hot air. Baked goods that are placed in the oven at the same time will not necessarily be ready at the same time.
- Position baking tins/dishes either next to one another or offset on different shelves so that they are not directly one above the other in the cooking compartment.
- For best results, we recommend using dark-coloured metal bakeware.

20.3 Notes on roasting and grilling

The setting values are based on the assumption that unstuffed, chilled, ready-to-roast poultry, meat or fish is placed into a cold cooking compartment.
- The larger the poultry, meat or fish, the lower the cooking temperature and the longer the cooking time.
- Turn the poultry, meat or fish after approx. 1/2 to 2/3 of the time listed.
- Add a little liquid to the poultry in the cookware. Cover the bottom of the cookware with approx. 1–2 cm of liquid.
- When you turn poultry, ensure that the breast side or skin side is underneath to begin with.

Roasting and grilling on the wire rack

Roasting on the wire rack works particularly well for large poultry or for multiple pieces at the same time.
- Depending on the size and type of the food to be roasted, add up to 1/2 litre water to the universal pan.
  You can make a sauce from the juices that are caught. This also means that less smoke is produced and the cooking compartment becomes less dirty.

- Keep the appliance door closed when using the grill.
  Never grill with the appliance door open.
- Place the food to be grilled on the wire rack. In addition, slide the universal pan in at least one shelf position lower, with the slanted edge facing the appliance door. This means that any dripping fat is caught.

Roasting in cookware

When preparing food in cookware with a lid, the cooking compartment remains cleaner.
Follow the manufacturer's instructions for your roasting dishes. Glass cookware is best.

Cookware without lid

- Use a deep roasting dish.
- Place the cookware onto the wire rack.
- If you do not have any suitable cookware, use the universal pan.

Cookware with lid

- Place the cookware onto the wire rack.
- Meat, poultry and fish can also become crispy in a covered roasting dish. Use a roasting dish with a glass lid. Set a higher temperature.

⚠ WARNING – Risk of injury!

If hot glass cookware is placed on a wet or cold surface, the glass may shatter.

- ▶ Place hot glass ovenware on a dry mat after cooking.

⚠ WARNING – Risk of scalding!

Very hot steam may escape when the lid is opened after cooking. Steam may not be visible, depending on the temperature.

- ▶ Lift the lid at the rear, so that the hot steam can escape away from you.
- ▶ Keep children at a safe distance.

20.4 Food selection

Food	Accessories/cookware	Shelf position	Type of heating	Temperature in °C/grill setting	Cooking time in mins
Sponge cake, delicate	Loaf tin	2		150-170	60-80
Sponge cake, 2 levels	Loaf tin	3+1		140-150	70-85
Fruit tart or cheesecake with shortcrust pastry base	Springform cake tin, diameter 26 cm	2		170-190	55-80
6-egg fatless sponge cake	Springform cake tin, 28 cm diameter	2		150-160[1]	30-40
Swiss roll	Baking tray	3		180-200[1]	10-15
Shortcrust tart with moist topping	Universal pan	2		160-180	55-95
Yeast cake with moist topping	Universal pan	3		180-200	30-55
Muffins	Muffin tray on wire rack	2		170-190	20-40
Small yeast cakes	Baking tray	3		150-170	20-30
Biscuits	Baking tray	3		140-160	15-25
Biscuits, 2 or 3 levels	Universal pan Baking tray	3+1 5+3+1		140-160	15-25
Bread, 1000 g (in a loaf tin or free-form)	Universal pan Loaf tin	2		200-220	35-50
Pizza, fresh	Baking tray	3		190-210	20-30
Pizza, fresh, thin-crust	Round pizza tray	2		250-270[1]	8-13
Bake, savoury, cooked ingredients	Ovenproof dish	2		200-220	30-60
Chicken, 1.3 kg, unstuffed	Cookware without lid	2		200-220	60-70
Small chicken portions, 250 g each	Cookware without lid	3		220-230	30-35
Goose, unstuffed, 3 kg	Cookware without lid	2		**1.** 140 **2.** 160	**1.** 130-140 **2.** 50-60
Joint of pork without rind, e.g. neck, 1.5 kg	Cookware without lid	2		160-170	150-160
Fillet of beef, medium, 1 kg	Wire rack Universal pan	3		210-220	40-50[2]

[1] Preheat the appliance.
[2] Turn the dish between halfway and two-thirds through the cooking time.
[3] At the start, add liquid to the cookware so that at least 2/3 of the joint is covered in liquid
[4] Turn the dish 2/3 of the way through the cooking time.
[5] Do not turn the food. Cover the base with water.
[6] Slide the universal pan underneath the wire rack.

Food	Accessories/cookware	Shelf position	Type of heating	Temperature in °C/grill setting	Cooking time in mins
Pot-roasted beef, 1.5 kg	Cookware with lid	2		200-220	140-160[3]
Sirloin, medium, 1.5 kg	Wire rack Universal pan	3		200-220	60-70[2]
Burger, 3–4 cm thick	Wire rack	4		3	25-30[4]
Lamb leg, boned, medium, 1.0 kg	Cookware without lid	2		170-190	70-80[5]
Fish, grilled, whole, 300 g, e.g. trout	Wire rack	2		160-180	20-30[6]

[1] Preheat the appliance.
[2] Turn the dish between halfway and two-thirds through the cooking time.
[3] At the start, add liquid to the cookware so that at least 2/3 of the joint is covered in liquid
[4] Turn the dish 2/3 of the way through the cooking time.
[5] Do not turn the food. Cover the base with water.
[6] Slide the universal pan underneath the wire rack.

20.5 Yoghurt

You can use your appliance to make your own yoghurt.

Preparing yoghurt

1. Remove the accessories and shelf supports from the cooking compartment.
2. Pour the previously prepared yoghurt mixture into small containers, e.g. into cups or small jars.
3. Cover the containers with foil, e. g. with cling film.
4. Place the containers on the cooking compartment floor.
5. Set the appliance according to the recommended setting.
6. After making the yoghurt, leave it to cool in the refrigerator.

Yoghurt

Food	Accessories/cookware	Shelf position	Type of heating	Temperature in °C	Cooking time in mins
Yoghurt	Individual moulds	Cooking compartment floor	**1.** ☐ **2.** Lamp	**1.** 50 **2.**	**1.** [1] **2.** 8–9 hrs

[1] Preheat the appliance.

20.6 Test dishes

These overviews have been produced for test institutes to facilitate appliance testing in accordance with EN 60350-1.

Baking

Observe this information when baking test dishes.

General information

- The settings apply to food that is placed into a cold cooking compartment.
- Observe the notes about preheating in the tables. These setting values apply without rapid heating.
- When baking, use the lower of the listed temperatures to begin with.

Shelf positions

Shelf positions for baking on two levels:

Note: Items that are placed in the oven on baking trays or in baking tins/dishes at the same time will not necessarily be ready at the same time.

- Universal pan: Level 3
  Baking tray: Level 1
- Baking tins/dishes on the wire rack
  First wire rack: Level 3
  Second wire rack: Level 1

Shelf positions for baking on three levels:

- Baking tray: Level 5
  Universal pan: Level 3
  Baking tray: Level 1

Baking with two springform cake tins:
Position baking tins/dishes either next to one another or offset on different shelves so that they are not directly one above the other in the cooking compartment.

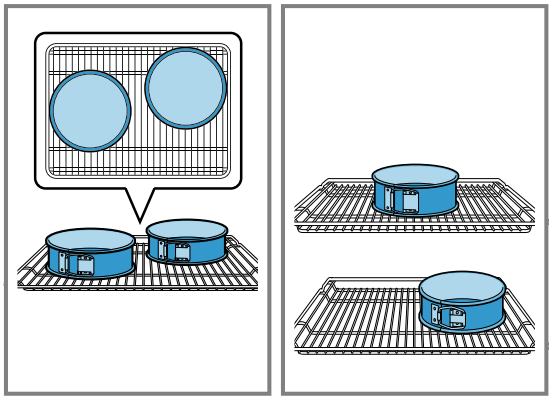

Baking

Food	Accessories/cookware	Shelf position	Type of heating	Temperature in °C	Cooking time in mins
Viennese whirls	Baking tray	3		140–150[1]	25–35
Viennese whirls	Baking tray	3		140–150[1]	20–30
Viennese whirls, 2 levels	Universal pan + Baking tray	3 + 1		140–150[1]	25–35
Viennese whirls, 3 levels	Universal pan + Baking tray	5 + 3 + 1		130–140[1]	35–55
Small cakes	Baking tray	3		150–160[1]	25–35
Small cakes	Baking tray	3		140–150[1]	20–30
Small cakes, 2 levels	Universal pan + Baking tray	3 + 1		140–150[1]	25–40
Small cakes, 3 levels	Universal pan + Baking tray	5 + 3 + 1		140[1]	30–40
Hot water sponge cake	Springform cake tin, diameter 26 cm	2		160–170[2]	25–35
Hot water sponge cake	Springform cake tin, diameter 26 cm	2		160–170	30–35
Hot water sponge cake, 2 levels	Springform cake tin, diameter 26 cm	3 + 1		150–160[2]	35–50

[1] Preheat the appliance for five minutes. Do not use the rapid heating function.
[2] Preheat the appliance. Do not use the rapid heating function.

Grilling

Food	Accessories/cookware	Shelf position	Type of heating	Temperature in °C/grill setting	Cooking time in mins
Toasting bread	Wire rack	5		3[1]	0.5–1.5

[1] Preheat the appliance for five minutes. Do not use the rapid heating function.

21 Installation instructions

Observe this information when installing the appliance.



21.1 General installation instructions

Follow these instructions before you start with the installation of the appliance.

- The safe operation of this appliance can only be guaranteed if it has been installed to a professional standard in accordance with these installation instructions. The installer shall be liable for damages incurred as a result of incorrect installation.
- Check the appliance for damage after unpacking it. Do not connect the appliance if it has been damaged in transit.
- Before starting up the appliance, remove any packaging material and adhesive film from the cooking compartment and the door.
- Observe the installation sheets when installing accessory parts.
- Fitted units must be heat-resistant up to 90 °C, and adjacent unit fronts up to 70 °C.
- Do not install the appliance behind a decorative door or the door of a kitchen unit. There is a risk of overheating.

- Cut-out work on the units should be carried out before installing the appliance. Remove any shavings. Otherwise, the correct operation of electrical components may be adversely affected.
- The mains socket for the appliance must either be located in the hatched area a or outside of the area where the appliance is installed.
  Any unsecured units must be secured to the wall using a standard bracket b.

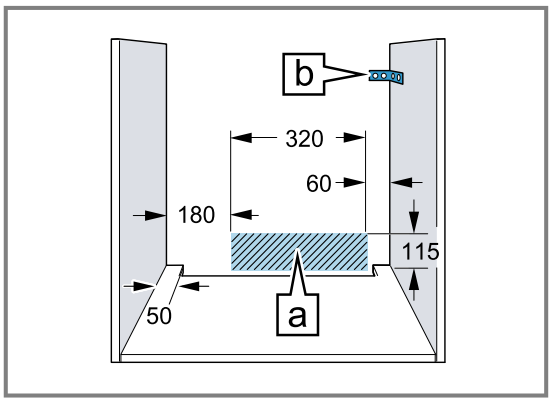

- Wear protective gloves so that you do not cut yourself. Parts that are accessible during installation may have sharp edges.
- Dimensions of the figures in mm.

21.2 Appliance dimensions

You will find the dimensions of the appliance here

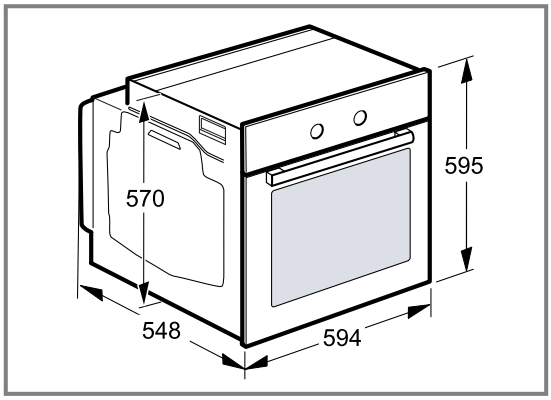

21.3 Installation below a worktop

Observe the installation dimensions and the installation instructions when installing below a worktop.

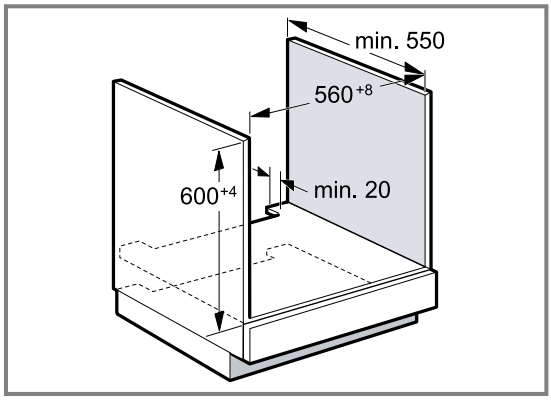

- To ventilate the appliance, the intermediate floor must have a ventilation cut-out.
- In combination with induction hobs, the gap between the worktop and appliance must not be sealed using additional strips.
- The worktop must be secured to the built-in unit.
- Observe any available installation instructions for the hob.

21.4 Installation in a tall unit

Observe the installation dimensions and the installation instructions when installing in a tall unit.

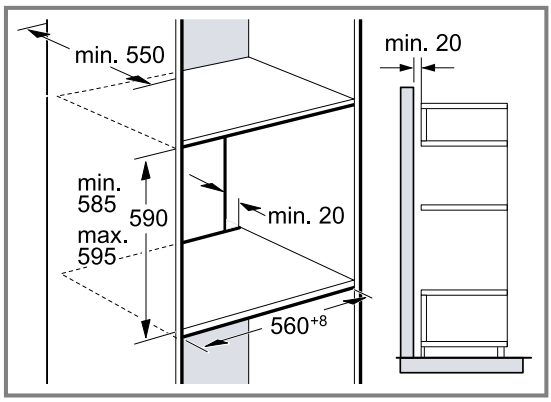

- To ventilate the appliance, the intermediate floors must have a ventilation cut-out.
- If the tall unit has another back panel in addition to the element back panels, this must be removed.
- Only fit the appliance up to a height which allows accessories to be easily removed.

21.5 Corner installation

Observe the installation dimensions and the installation instructions when installing in a corner.

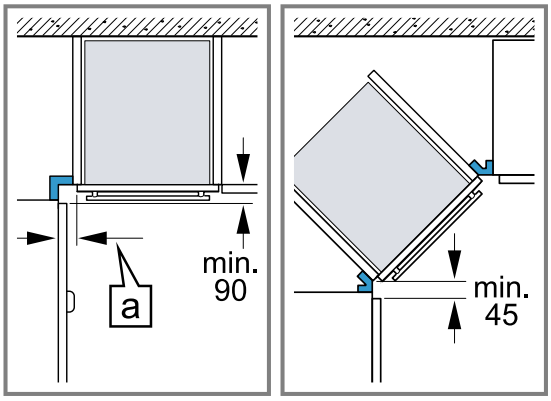

- To ensure that the appliance door can be opened, you must take the minimum dimensions into consideration when installing in a corner. The dimension a is dependent on the thickness of the unit front and the handle.

21.6 Electrical connection

In order to safely connect the appliance to the electrical system, follow these instructions.

- The appliance corresponds to protection class I and must only be operated with a protective earth connection.
- The fuse protection must correspond to the power rating specified on the appliance's rating plate and to local regulations.
- The appliance must be disconnected from the power supply whenever installation work is being carried out.
- The appliance must only be connected using the power cable provided.
- The power cable must be plugged in at the rear of the appliance until you hear a clicking sound. A 3 m power cable can be obtained from the after-sales service.
- The power cable must only be replaced with a cable from the original manufacturer. This is available from after-sales service.
- Contact protection must be ensured during the installation.

Electrically connect the appliance with the protective contact plug

Note: The appliance must only be connected to a protective contact socket that has been correctly installed.

- Insert the plug into the protective contact socket. When the appliance is installed, the mains plug of the power cord must be freely accessible. If free access to the mains plug is impossible, an all-pole isolating switch must be integrated into the permanent electrical installation in accordance with the installation regulations.

Electrically connecting an appliance without a protective contact plug

Note: Only a licensed professional may connect the appliance. Damage caused by incorrect connection is not covered under the warranty.
An all-pole isolating switch must be integrated into the permanent electrical installation according to the installation regulations.

1. Identify the phase and neutral conductors in the socket.
   The appliance may be damaged if it is not connected correctly.
2. Connect the hob in accordance with the connection diagram.
   See the rating plate for the voltage.
3. Connect the wires of the mains power cable according to the colour coding:
   - Green/yellow = Protective conductor ⏚
   - Blue = Neutral conductor
   - Brown = Phase (external conductor)

21.7 Installing the appliance

1. Slide the appliance all the way in and centre it.

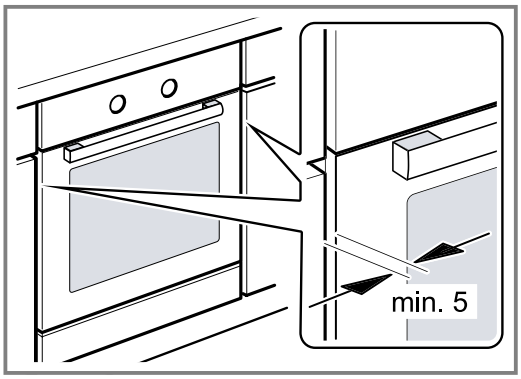

2. Screw the appliance into place.

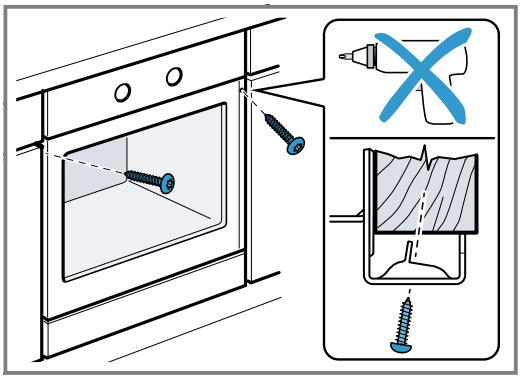

Note: The gap between the worktop and the appliance must not be closed by additional battens.
Thermal insulation strips must not be fitted to the side panels of the surround unit.

21.8 Removing the appliance

1. Disconnect the appliance from the power supply.
2. Undo the securing screws.
3. Lift the appliance slightly and pull it out completely.

BSH Hausgeräte GmbH
Carl-Wery-Straße 34
81739 München
GERMANY
www.siemens-home.bsh-group.com

Manufactured by BSH Hausgeräte GmbH under the trademark licence of Siemens AG

9001572790 (000915)
en