BOSCH

Register your new device on MyBosch now and get free benefits: bosch-home.com/welcome

MyBosch

Microwave

BFL554MS0 BFL554MW0 BFL554MB0 BFL553MS0

[en] Instruction manual

Microwave

Table of contents

Intended use 4

Important safety information 4
General information 4
Microwave 5

Installation and connection. 7

Causes of damage 7

Environmental protection 7
Environmentally-friendly disposal 7

Getting to know your appliance 8
Control panel 8
Controls 8
Changing the signal duration 9

Accessories 9
Special accessories 9

Before using for the first time. 9
Cleaning the cooking compartment and putting the turntable in place 9
Setting the clock 9
Cleaning the cooking compartment and accessories 10

Microwave. 10
Cookware. 10
Microwave power settings 10
Setting the microwave 11

Memory 11
Saving memory settings. 11
Starting the memory. 11

Programmes 12
Setting a programme 12
Defrosting using the automatic programmes 12
Cooking with the automatic programmes 13

Basic settings. 13

Cleaning 14
Cleaning agent. 14

Trouble shooting 15

Customer service. 16
E number and FD number 16
Technical specifications 16

Tested for you in our cooking studio. 17
Suitable ovenware 17
Unsuitable cookware 17
Defrosting. 17
Heating frozen food 18
Heating food. 19
Microwave tips 20

Test dishes 20

Additional information on products, accessories, replacement parts and services can be found at **www.bosch-home.com** and in the online shop **www.bosch-eshop.com**

Intended use

Read these instructions carefully. Only then will you be able to operate your appliance safely and correctly. Retain the instruction manual and installation instructions for future use or for subsequent owners.

This appliance is only intended to be fully fitted in a kitchen. Observe the special installation instructions.

Check the appliance for damage after unpacking it. Do not connect the appliance if it has been damaged in transport.

Only a licensed professional may connect appliances without plugs. Damage caused by incorrect connection is not covered under warranty.

This appliance is intended for domestic use only. The appliance must only be used for the preparation of food and drink. The appliance must be supervised during operation. Only use this appliance indoors.

This appliance is intended for use up to a maximum height of 4000 metres above sea level.

This appliance may be used by children over the age of 8 years old and by persons with reduced physical, sensory or mental capabilities or by persons with a lack of experience or knowledge if they are supervised or are instructed by a person responsible for their safety how to use the appliance safely and have understood the associated hazards.

Children must not play with, on, or around the appliance. Children must not clean the appliance or carry out general maintenance unless they are at least 15 years old and are being supervised.

Keep children below the age of 8 years old at a safe distance from the appliance and power cable.

Always place the accessories into the cooking compartment correctly. ⟶ *"Before using for the first time" on page 9*

Important safety information

General information

⚠ Warning – Risk of fire!

- Combustible items stored in the cooking compartment may catch fire. Never store combustible items in the cooking compartment. Never open the appliance door if there is smoke inside. Switch off the appliance and unplug it from the mains or switch off the circuit breaker in the fuse box.
- The appliance becomes very hot. If the appliance is installed in a fitted unit with a decorative door, heat will accumulate when the decorative door is closed. Only operate the appliance when the decorative door is open.

⚠ Warning – Risk of electric shock!

- Incorrect repairs are dangerous. Repairs may only be carried out and damaged power cables replaced by one of our trained after-sales technicians. If the appliance is defective, unplug the appliance from the mains or switch off the circuit breaker in the fuse box. Contact the after-sales service.
- The cable insulation on electrical appliances may melt when touching hot parts of the appliance. Never bring electrical appliance cables into contact with hot parts of the appliance.
- Do not use any high-pressure cleaners or steam cleaners, which can result in an electric shock.
- Penetrating moisture may cause electric shock. Never subject the appliance to intense heat or humidity. Only use this appliance indoors.
- A defective appliance may cause electric shock. Never switch on a defective appliance. Unplug the appliance from the mains or switch off the circuit breaker in the fuse box. Contact the after-sales service.
- The appliance is a high-voltage appliance. Never remove the casing.

⚠ Warning – Risk of fire!

- The appliance becomes very hot. Make sure that you comply with the figures indicated for the minimum clearance above the appliance. ⟶ *Page 7*

– Do not install the appliance behind a decorative door or the door of a kitchen unit.
– The appliance must not be installed in a fitted kitchen unit.

There is a risk of overheating.

- Accessories and ovenware become very hot. Always use oven gloves to remove accessories or ovenware from the cooking compartment.
- Alcoholic vapours may catch fire in the hot cooking compartment. Never prepare food containing large quantities of drinks with a high alcohol content. Only use small quantities of drinks with a high alcohol content. Open the appliance door with care.

⚠ Warning – Risk of scalding!

- When you open the appliance door, hot steam may escape. Open the appliance door with care. Keep children at a safe distance.
- Water in a hot cooking compartment may create hot steam. Never pour water into the cooking compartment when the cooking compartment is hot.

⚠ Warning – Risk of injury!

Scratched glass in the appliance door may develop into a crack. Do not use a glass scraper, sharp or abrasive cleaning aids or detergents.

Microwave

⚠ Warning – Risk of fire!

- Using the appliance for anything other than its intended purpose is dangerous and may cause damage.
  The following is not permitted: drying out food or clothing, heating slippers, grain or cereal pillows, sponges, damp cleaning cloths or similar.
  For example, heated slippers and grain or cereal pillows may catch fire, even several hours after they have been heated.The appliance must only be used for the preparation of food and drinks.
- Food may catch fire. Never heat food in heat-retaining packages.
  Do not leave food heating unattended in containers made of plastic, paper or other combustible materials.
  Do not select a microwave power or time setting that is higher than necessary. Follow the information provided in this instruction manual.
  Never use the microwave to dry food.
  Never defrost or heat food with a low water content, e.g. bread, at too high a microwave power or for too long.
- Cooking oil may catch fire. Never use the microwave to heat cooking oil on its own.

⚠ Warning – Risk of explosion!

Liquids and other food may explode when in containers that have been tightly sealed. Never heat liquids or other food in containers that have been tightly sealed.

⚠ Warning – Risk of burns!

- Foods with peel or skin may burst or explode during, or even after, heating. Never cook eggs in their shells or reheat hard-boiled eggs. Never cook shellfish or crustaceans. Always prick the yolk when baking or poaching eggs. The skin of foods that have a peel or skin, such as apples, tomatoes, potatoes and sausages, may burst. Before heating, prick the peel or skin.
- Heat is not distributed evenly through baby food. Never heat baby food in closed containers. Always remove the lid or teat. Stir or shake well after the food has been heated. Check the temperature of the food before it is given to the child.
- Heated food gives off heat. The ovenware may become hot. Always use oven gloves to remove ovenware or accessories from the cooking compartment.
- Airtight packaging may burst when food is heated. Always observe the instructions on the packaging. Always use oven gloves to remove dishes from the cooking compartment.
- The accessible parts become very hot when in operation. Never touch hot parts. Keep children at a safe distance.

- Using the appliance for anything other than its intended purpose is dangerous.
  You are not permitted to use it to dry food or clothing or to warm slippers, grain or cereal pillows, sponges, damp cleaning cloths or the like.
  This is because, for instance, overheated slippers, grain or cereal pillows, sponges and damp cleaning cloths, etc., may cause burns to the skin.

⚠ Warning – Risk of scalding!

- There is a possibility of delayed boiling when a liquid is heated. This means that the liquid reaches boiling temperature without the usual steam bubbles rising to the surface. Even if the container only vibrates a little, the hot liquid may suddenly boil over and spatter. When heating, always place a spoon in the container. This will prevent delayed boiling.

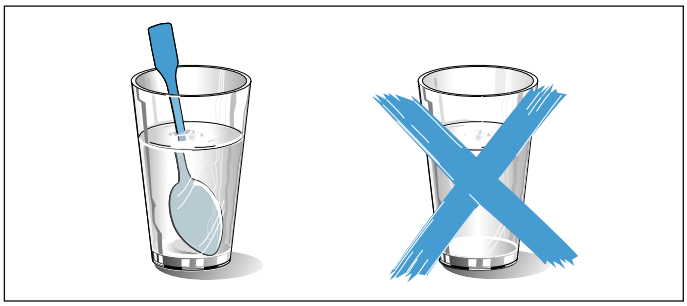

⚠ Warning – Risk of injury!

- Unsuitable ovenware may crack. Porcelain or ceramic ovenware can have small perforations in the handles or lids. These perforations conceal a cavity below. Any moisture that penetrates this cavity could cause the ovenware to crack. Only use microwave-safe ovenware.
- If using the appliance in microwave mode only, placing cookware and containers made of metal or featuring metal detailing inside the appliance may cause sparks when the appliance is operating. This may damage the appliance. Never use metal containers when using the appliance in microwave mode only.

⚠ Warning – Risk of injury!

- Scratched glass in the appliance door may develop into a crack. Do not use a glass scraper, sharp or abrasive cleaning aids or detergents.
- Unsuitable ovenware may crack. Porcelain or ceramic ovenware can have small perforations in the handles or lids. These perforations conceal a cavity below. Any moisture that penetrates this cavity could cause the ovenware to crack. Only use microwave-safe ovenware.
- If using the appliance in microwave mode only, placing cookware and containers made of metal or featuring metal detailing inside the appliance may cause sparks when the appliance is operating. This may damage the appliance. Never use metal containers when using the appliance in microwave mode only.
- The glass turntable may splinter.Never allow hard objects to strike the turntable.
- Cracks or chinks in the glass turntable are dangerous. Handle the turntable with care.

⚠ Warning – Risk of electric shock!

The appliance is a high-voltage appliance. Never remove the casing.

⚠ Warning – Risk of serious damage to health!

- The surface of the appliance may become damaged if it is not cleaned properly. Microwave energy may escape. Clean the appliance on a regular basis, and remove any food residue immediately. Always keep the cooking compartment, door seal, door and door stop clean. ⟶ *"Cleaning" on page 14*
- Microwave energy may escape if the cooking compartment door or the door seal is damaged. Never use the appliance if the cooking compartment door or the door seal is damaged. Contact the after-sales service.
- Microwave energy will escape from appliances that do not have any casing. Never remove the casing. For any maintenance or repair work, contact the after-sales service.

Installation and connection

This appliance is designed for domestic use only.

This appliance is designed to be fully integrated into kitchen units.

Please follow the dedicated installation instructions.

The appliance is ready to be plugged in and may only be connected to a Schuko socket that has been correctly installed. The circuit breaker must have a rating of 10 A (L- or B-type circuit breaker).The mains voltage must correspond to the voltage specified on the rating plate.

Only a qualified electrician may install the socket or replace the power cable.If the plug is no longer accessible once the appliance has been installed, an all-pole isolating switch with a contact gap of at least 3 mm must be provided for the wiring.

Do not use multi-socket adaptors, power strips or extension leads. Overloading causes a risk of fire.

Causes of damage

Caution!

- **Heavily soiled seal:** If the seal is very dirty, the appliance door will no longer close properly during operation. The fronts of adjacent units could be damaged. Always keep the seal clean.
- **Operating the microwave without food:** Operating the appliance without food in the cooking compartment may lead to overloading. Never switch on the appliance unless there is food in the cooking compartment.The only exception to this rule is when performing a short cookware test.⟶ *"Cookware test" on page 10*
- **Microwave popcorn:** Never set the microwave power too high. Use a power setting no higher than 600 watts. Always place the popcorn bag on a glass plate. The disc may jump if overloaded.
- Liquid that has boiled over must not be allowed to run through the turntable drive into the interior of the appliance. Monitor the cooking process. Choose a shorter cooking time initially, and increase the cooking time as required.
- Never use the microwave oven without the turntable.
- **Creation of sparks:** Metal - e.g. a spoon in a glass - must be kept at least 2 cm from the oven walls and the inside of the door. Sparks could irreparably damage the glass on the inside of the door.
- **Foil containers:** Do not use foil containers in the appliance. They damage the appliance by producing sparks.
- **Cooling with the appliance door open:** Only leave the cooking compartment to cool with the door closed. Do not trap anything in the appliance door. Even if the door is only slightly ajar, the fronts of adjacent units may be damaged over time.
- **Condensation in the cooking compartment:** Condensation may appear on the door window, interior walls and floor. This is normal and does not adversely affect microwave operation. To prevent corrosion, wipe off the condensation every time you cook.

Environmental protection

Environmentally-friendly disposal

Dispose of packaging in an environmentally-friendly manner.



This appliance is labelled in accordance with European Directive 2012/19/EU concerning used electrical and electronic appliances (waste electrical and electronic equipment - WEEE). The guideline determines the framework for the return and recycling of used appliances as applicable throughout the EU.

Getting to know your appliance

In this section, we will explain the display and controls.You will also find out about the various functions of your appliance.

Note: Depending on the appliance model, individual details and colours may differ.

Control panel

You can set your appliance's various functions on the control panel. The current settings are shown on the display.

The overview shows the control panel when the appliance is switched on with a clock time that has been set.

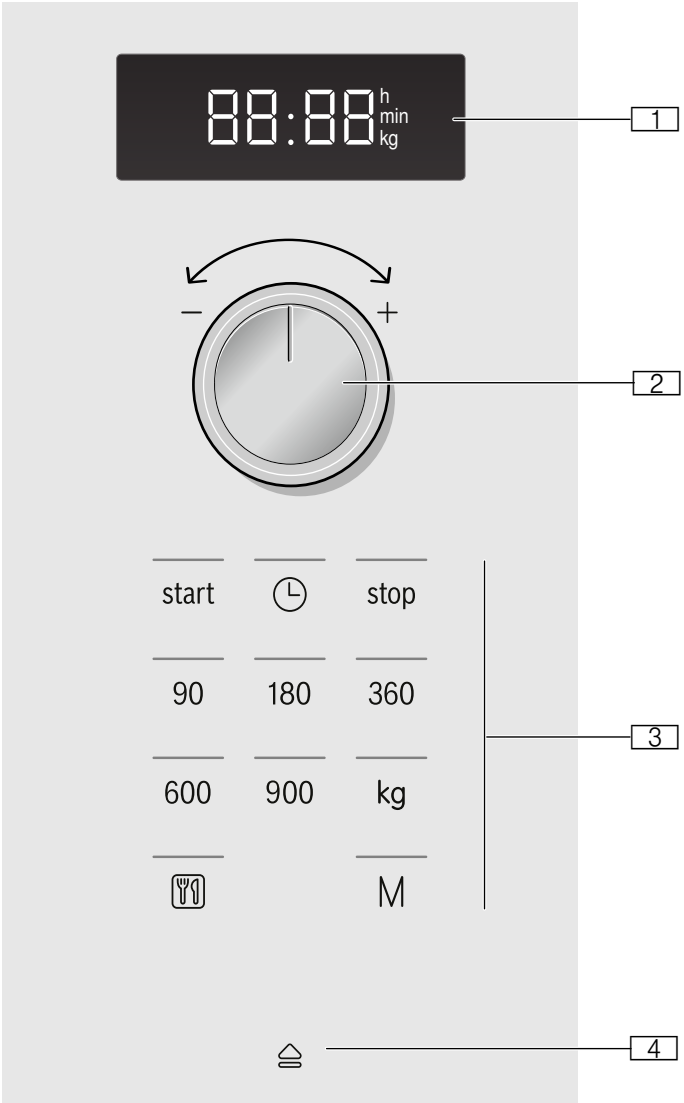

1 **Display**
For clock and cooking times

2 **Rotary selector**
For setting the clock and cooking times or for setting automatic programmes

3 **Buttons**

4 **Automatic door opening button**

Controls

You will find a brief explanation of the various buttons below. These buttons allow you to set your appliance simply and directly.

Buttons and their meaning

You will find a brief explanation of the various buttons below.

Buttons	Meaning
Symbol	
start	Start the appliance
🕒	Setting the time
stop	Stop or pause the appliance
90	Select a microwave power output of 90 watts
180	Select a microwave power output of 180 watts
360	Select a microwave power output of 360 watts
600	Select a microwave power output of 600 watts
900	Select a microwave power output of 900 watts
kg	Select a weight for the programmes
🍴	Select automatic programmes
M	Select the memory
⏏	Open appliance door

Rotary selector

The rotary selector is used to alter the default values and set values.

The rotary selector is retractable. Press on the rotary selector to lock it in or out.

Automatic door opening

The appliance door springs open if you activate the automatic door opening. You can fully open the appliance door manually.

The automatic door opening does not work in the event of a power cut. You can open the door manually.

Notes

- If you open the appliance door during operation, the operation is paused.
- When you close the appliance door, the operation does not continue automatically. You must restart the operation manually.
- If the appliance has been switched off for a long time, the appliance door will open after a time delay.

Cooling fan

The appliance is equipped with a cooling fan. The fan may run on even if the oven has been switched off.

Notes

- The cooking compartment remains cold during microwave operation. The cooling fan will still switch on. The fan may run on even when microwave operation has ended.

- Condensation may appear on the door window, interior walls and floor. This is normal and does not adversely affect microwave operation. Wipe away the condensation after cooking.

Changing the signal duration

You will hear a signal when the appliance is switched off. You can change the duration of the acoustic signal.

Press the "start" button for approx. 6 seconds.

The new signal duration is adopted.
The clock reappears.

The following are possible:
Short signal duration - 3 tones
Long signal duration - 30 tones.

Accessories

Below, you will find an overview of the accessories included and information on how to use them correctly.

Caution!
When removing dishes, make sure that the turntable does not move. Make sure that the turntable is properly locked. The turntable can turn left or right.



Turntable

Note: Never use the appliance without the turntable.Make sure that it is properly engaged. The turntable can turn clockwise or anti-clockwise.

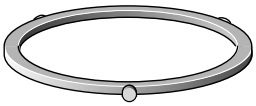

Roller ring

Special accessories

Special accessories can be purchased from our after-sales service, from specialist retailers, or online. You will find a comprehensive range of products in our brochures and online.

Their availability and whether it is possible to order them online varies from country to country. Please see our sales brochures for more details.

Note: Not all special accessories are suitable for every appliance. When purchasing, please always quote the exact identification number (E-no.) of your appliance.
→ *"Customer service" on page 16*

Steaming utensils	For cooking rice, potatoes and vegetables

Before using for the first time

This section tells you what you need to do before using your microwave to prepare food for the first time. Read the section entitled "Safety information" beforehand.
→ *"Important safety information" on page 4*

Before you can use your new appliance, you will need to put the turntable in place correctly. You must also clean the cooking compartment and accessories.

Cleaning the cooking compartment and putting the turntable in place

Before using the appliance to prepare food for the first time, you must clean the cooking compartment and accessories.

How to put the turntable in place

1. Place the roller ring **a** into the recess in the cooking compartment.
2. Make sure that the turntable **b** engages in the drive **c** in the centre of the cooking compartment floor.

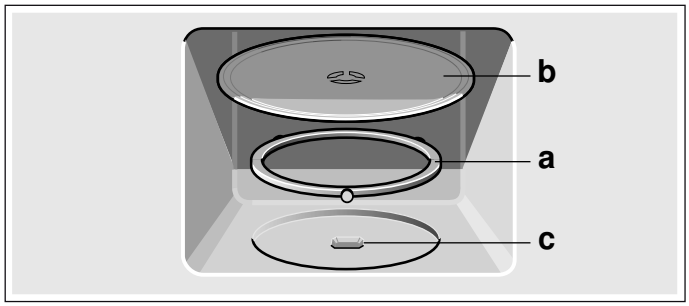

Note: Never use the appliance without the turntable. Make sure that it is properly engaged.The turntable can turn clockwise or anti-clockwise.

Setting the clock

When the appliance is first connected or after a power cut, three zeros will appear in the display panel.

1. Press the ◷ button.
   12:00 h appears in the display and the indicator lamp above the ◷ button lights up.
2. Set the clock using the rotary selector.
3. Press the ◷ button again.

The current time is set.

Hiding the clock

Press the ◷ button and then press Stop.
The display is blank.

Resetting the clock

Press the ◷ button.
"12:00" appears in the display. Make settings as detailed in points 2 and 3.

Change the clock, e.g. from summer to winter time

Set as described in point 1 to 3.

Cleaning the cooking compartment and accessories

To eliminate the new-appliance smell, wipe down the cooking compartment with hot soapy water when it is empty.⟶ *"Cleaning" on page 14*

Tip: Make sure that there is no leftover packaging, such as polystyrene pellets, in the cooking compartment. Wipe the smooth surfaces in the cooking compartment with a soft, damp cloth.

Cleaning the accessories

Clean the accessories thoroughly using soapy water and a dish cloth or soft brush.

Microwave

You can use the microwave to cook, heat up or defrost food quickly.

To ensure optimum use of the microwave, please observe the notes on cookware and familiarise yourself with the data in the application tables at the end of the instruction manual. ⟶ *"Tested for you in our cooking studio" on page 17*

Try out the microwave straight away. You could heat up a cup of water for your tea, for example.

Use a large cup without any decorative gold or silver trim and place a teaspoon in it. Place the cup containing the water on the turntable, slightly off-centre.

1. Press 900 W.
2. Use the rotary selector to set to 1:30 minutes.
3. Press the "Start" button.

A signal sounds after 1 minute and 30 seconds. The water is hot.

⚠ Warning – Risk of scalding!
There is a possibility of delayed boiling when a liquid is heated. This means that the liquid reaches boiling temperature without the usual steam bubbles rising to the surface. Even if the container only vibrates a little, the hot liquid may suddenly boil over and spatter. When heating, always place a spoon in the container. This will prevent delayed boiling.

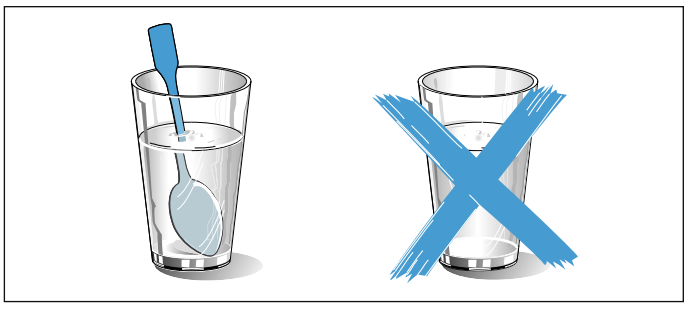

Cookware

Not all cookware is microwavable. So that your food is heated and the appliance is not damaged, only use microwavable cookware.

Suitable cookware

Heat-resistant cookware made of glass, glass ceramic, porcelain, ceramic or heat-resistant plastic are suitable. These materials allow microwaves to pass through.

You can also use serving dishes. This saves you having to transfer food from one dish to another. You should only use cookware with decorative gold or silver trim if the manufacturer guarantees that they are suitable for use in microwaves.

Unsuitable cookware

Metal cookware is unsuitable. Metal does not allow microwaves to pass through. Food in covered metal containers will remain cold.

Caution!

Creation of sparks: Metal – e.g. a spoon in a glass – must be kept at least 2 cm from the cooking compartment walls and the inside of the door. Sparks can irreparably damage the glass on the inside of the door.

Cookware test

Never switch on the microwave unless there is food inside. The short cookware test is the only exception to this rule.

Perform the following test if you are unsure whether your cookware is suitable for use in the microwave.

1. Heat the empty cookware at maximum power for ½ to 1 minute.
2. Check the temperature of the cookware during this time.

The cookware should remain cold or warm to the touch.

The cookware is unsuitable if it becomes hot or sparks are generated.
In this case, stop the test.

⚠ Warning – Risk of burns!
The accessible parts become very hot when in operation. Never touch hot parts. Keep children at a safe distance.

Microwave power settings

Microwave power setting	Suitable for
90 W	Defrosting delicate foods
180 W	Defrosting and continued cooking
360 W	Cooking meat and heating delicate foods

Microwave power setting	Suitable for
600 W	Heating and cooking food
900 W	Heating liquids

Note: You can set the 900 W microwave power setting for 30 minutes, 600 W for 1 hour, the other power settings for 1 hour and 39 minutes respectively.

Setting the microwave

Example: Microwave power output 600 W, cooking time 5 minutes

1. Press the required microwave power setting.
   The indicator light above the button lights up.
2. Use the rotary selector to set a cooking time.

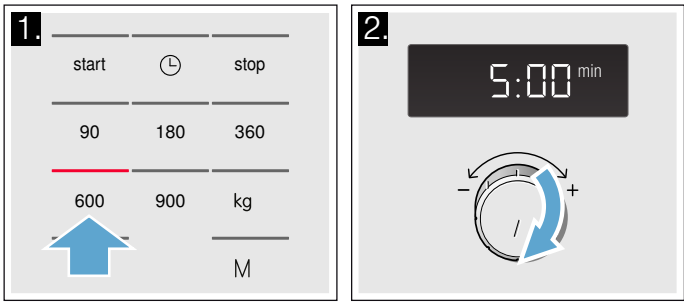

3. Press the "Start" button.

The cooking time counts down in the display.

The cooking time has elapsed

A signal sounds. Open the appliance door or press Stop. The clock reappears.

Changing the cooking time

This can be done at any time. Change the cooking time using the rotary selector.

Pausing the appliance

Press the Stop button once or open the appliance door. This pauses the appliance. The indicator above the Stop button will light up.After closing the door, press the Start button again.

Cancelling operation

Press the Stop button twice, or open the door and press the Stop button once.

Note: You can also adjust the cooking time first and then the microwave power setting.

M Memory

The memory function allows you to save the setting for a dish and call it up at any time.

The memory function is useful if you prepare one dish particularly frequently.

Saving memory settings

Example: 360 W, 25 minutes

1. Press the **M** button.
   The indicator light above the button lights up.
2. Press the required microwave power setting.
   The indicator light above the button lights up and "1:00 min" appears in the display.
3. Use the rotary selector to set the cooking time.

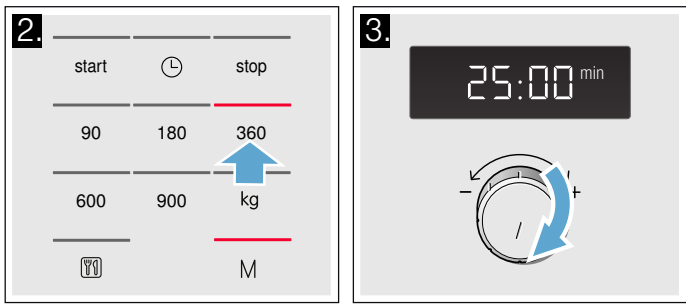

4. Confirm by pressing the **M** button.

The clock reappears. The setting has been saved.

Notes

- You cannot save several microwave power settings one after the other.
- You cannot save automatic programmes.
- You can save the memory settings and start the appliance immediately. When finishing, instead of pressing **M**, press Start.
- **Saving a new setting in the memory:** press the **M** button. The old settings appear. Save the new programme as described in steps 1-4.

Starting the memory

It is very easy to start the saved programme. Place your meal into the appliance. Close the appliance door.

1. Press the **M** button.
   The saved settings are displayed.
2. Press the "Start" button.

The cooking time counts down in the display.

The cooking time has elapsed

A signal sounds. Open the appliance door or press Stop. The clock reappears.

Pausing the appliance

Touch the Stop button once or open the appliance door. This pauses the appliance. The indicator above the Stop button will light up.After closing the door, touch the Start button again.

Cancelling

Press the "stop" button twice, or open the door and press the "stop" button once.

Programmes

You can prepare food really easily using the various programmes. You select a programme and enter the weight of your food. The program then applies the most suitable settings.

Note: You can choose from 7 programmes.

Setting a programme

Once you have selected a programme, make settings as follows:

1. Press the button repeatedly until the required programme number appears.
   The indicator light above the button lights up.
2. Press the **kg** button.
   The indicator light above the button lights up and a suggested value appears in the display.

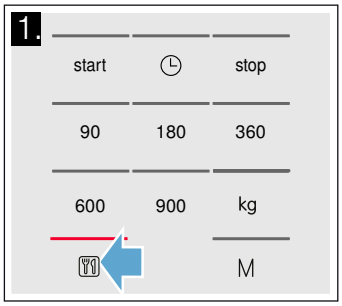

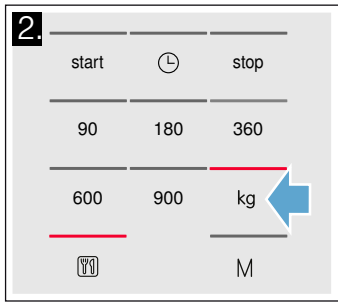

3. Use the rotary selector to set the weight of the dish.
4. Press the "Start" button.

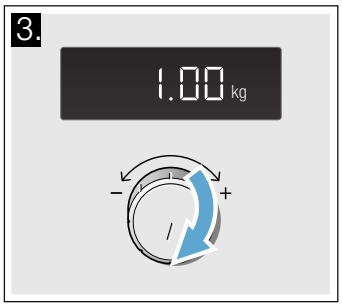

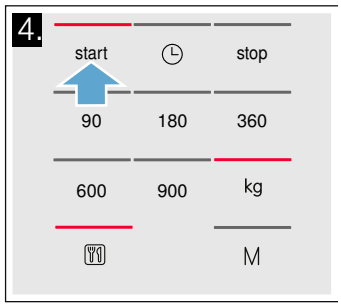

The cooking time for the programme starts counting down.

The cooking time has elapsed

A signal sounds. Open the appliance door or press Stop. The clock reappears.

Correction

Press the "stop" button twice and reset.

Pausing the appliance

Press the Stop button once or open the appliance door. This pauses the appliance. The indicator above the Stop button will light up.After closing the door, press the Start button again.

Cancelling

Press the "stop" button twice, or open the door and press the "stop" button once.

Notes

- For some programmes, a signal sounds after a certain time. Open the appliance door and stir the food or turn the meat or poultry. After closing the door, press the "Start" button again.
- You can query the programme number and weight using or **kg**. The queried value is shown for 3 seconds in the display.

Defrosting using the automatic programmes

You can use the 4 defrosting programmes to defrost meat, poultry and bread.

Notes

- **Preparing food**
  Use food that has been frozen at -18 °C and stored in portion-sized quantities that are as thin as possible.
  Take the food to be defrosted out of all packaging and weigh it. You need to know the weight to set the programme.
- Liquid will be produced when defrosting meat or poultry. Drain off this liquid when turning meat and poultry and under no circumstances use it for other purposes or allow it to come into contact with other foods.
- **Ovenware**
  Place the food in a microwaveable shallow dish, e.g. a china or glass plate, but do not cover.
- **Resting time**
  The defrosted food should be left to stand for an additional 10 to 30 minutes until it reaches an even temperature. Large pieces of meat require a longer standing time than smaller pieces. Flat pieces of meat and items made from minced meat should be separated from each other before leaving to stand. After this time, you can continue to prepare the food, even though thick pieces of meat may still be frozen in the middle. The giblets can be removed from poultry at this point.
- **Signal**
  For some programmes, a signal sounds after a certain time. Open the appliance door and separate the food out or turn the meat or poultry. Close the door and press the Start button.

Programme no.		Weight range in kg
	Defrost	
P 01	Minced meat	0.20 - 1.00
P 02	Pieces of meat	0.20 - 1.00
P 03	Chicken, chicken pieces	0.40 - 1.80
P 04	Bread	0.20 - 1.00

Cooking with the automatic programmes

With the 3 cooking programmes, you can cook rice, potatoes or vegetables.

Notes

- **Ovenware**
  The food must be cooked in microwaveable cookware with a lid. For rice, you should use a large, deep dish.
- **Preparing food**
  Weigh out the food. You need to know the weight to set the programme.
  Rice:
  Do not use boil-in-the-bag rice. Add the required amount of water, as specified on the packaging. This is usually two or three times the quantity of rice.
  Potatoes:
  For boiled potatoes, cut the fresh potatoes into small, even-sized pieces. Add one tablespoon of water for each 100 g boiled potatoes, and a little salt.
  Fresh vegetables:
  Weigh out the fresh, trimmed vegetables. Cut the vegetables into small, even-sized pieces. Add a tbsp water for each 100 g vegetables.
- **Signal**
  While the programme is running, a signal sounds after some time. Stir the food.
- **Resting time**
  Once the programme has finished, stir the food again. You should leave it to stand for another 5 to 10 minutes until it reaches an even temperature. The cooking result will depend on the quality and consistency of the food.

Programme no.		Weight range in kg
	Cooking	
P 05	Rice	0.05 - 0.2
P 06	Potatoes	0.15 - 1.0
P 07	Vegetables	0.15 - 1.0

Basic settings

Your appliance has basic settings that you can change to suit your needs.

Setting		Options	
1	Button tone	On*	Switched on
		OFF	Switched off Button tone (will remain active for the **start** and **stop** buttons)
2	Demo mode	dEO	The appliance is switched off. You can use the buttons and the display, but the buttons will not activate any function on the appliance (i.e. the microwave has no power). Demo mode is mainly used by dealers.
* Factory setting (factory settings may vary depending on the appliance model)			

You can change the button tone on your appliance if you wish.

Changing the button tone

The appliance must be switched off when you do this.

1. Press and hold the **start** and **stop** buttons at the same time for a couple of seconds.
   1 will appear in the display.
2. Touch the **start** button.
   On will start flashing in the display.
3. Turn the rotary selector to OFF.
4. Touch the **start** button.
   The setting has been applied.
5. Touch the **stop** button.

The button tone has been switched off.

You can change this setting at any time.

Cleaning

With good care and cleaning, your appliance will retain its appearance and remain fully functioning for a long time to come. We will explain here how you should correctly care for and clean your appliance.

⚠ Warning – Risk of electric shock!
Do not use any high-pressure cleaners or steam cleaners, which can result in an electric shock.

⚠ Warning – Risk of injury!
Scratched glass in the appliance door may develop into a crack. Do not use a glass scraper, sharp or abrasive cleaning aids or detergents.

⚠ Warning – Risk of serious harm to health!
The surface of the appliance may become damaged if it is not cleaned properly. Microwave energy may escape. Clean the appliance on a regular basis, and remove any food remnants immediately.⟶ *"Cleaning agent" on page 14*

⚠ Warning – Risk of electric shock!
Do not immerse the appliance in water or clean under a jet of water.

Note: Unpleasant odours, for example after fish has been prepared, can be removed very easily. Add a few drops of lemon juice to a cup of water. Always place a spoon in the container to prevent delayed boiling. Heat the water for 1 to 2 minutes at maximum microwave output.

Cleaning agent

To ensure that the different surfaces are not damaged by using the wrong cleaning agent, observe the information in the table.

Do not use:

- Harsh or abrasive cleaning agents.
- Metal or glass scrapers to clean the door panels.
- Metal or glass scrapers to clean the door seal.
- Hard scouring pads or sponges.
- Cleaning agents with a high alcohol content.

Wash new sponge cloths thoroughly before use.

Area	Cleaning product
Appliance front	Hot soapy water: Clean using a dish cloth and then dry with a soft cloth. Do not use metal or glass scrapers for cleaning.
Appliance front with stainless steel	Hot soapy water: Clean using a dish cloth and then dry with a soft cloth. Remove splashes and patches of limescale, grease, starch and albumin (e.g. egg white) immediately. Corrosion can form under these patches or splashes. Special stainless-steel cleaning products are available from the after-sales service or from specialist retailers. Do not use glass cleaners or metal or glass scrapers for cleaning.
Cooking compartment made of stainless steel	Hot soapy water or vinegar solution: Clean using a dish cloth and then dry with a soft cloth.Do not use oven spray or any other aggressive oven cleaners or abrasive materials. Scouring pads, rough sponges and pan cleaners are also unsuitable. These items scratch the surface. Allow the interior surfaces to dry completely.
Recess in the cooking compartment	Damp cloth: Water must not be allowed to run into the appliance through the turntable drive. Dry the turntable drive with a cloth.
Turntable and roller ring	Hot soapy water: When placing the turntable back into its recess, it must engage properly.
Door panels	Glass cleaner: Clean with a dish cloth. Do not use glass scrapers.

Trouble shooting

If a fault occurs, there is often a simple explanation. Before calling the after-sales service, please refer to the fault table and attempt to correct the fault yourself.

Tip: If a dish does not turn out exactly as you wanted, refer to the following chapter, where you will find lots of tips and notes relating to the optimum settings.⟶ *"Tested for you in our cooking studio" on page 17*

⚠ Warning – Risk of electric shock!
Incorrect repairs are dangerous. Repairs may only be carried out and damaged power cables replaced by one of our trained after-sales technicians. If the appliance is defective, unplug the appliance from the mains or switch off the circuit breaker in the fuse box. Contact the after-sales service.

Fault table

Fault	Possible cause	Remedy/information
The appliance is not working	The plug is not plugged into the mains	Connect the appliance to the electricity supply
	Power failure	Check whether other kitchen appliances are working
	The circuit breaker/fuse is faulty	Check in the fuse box to make sure that the circuit breaker/fuse for the appliance is in working order
	Faulty operation	Switch off the circuit breaker/fuse for the appliance in the fuse box and switch it back on after approximately 10 seconds
Three zeros are lit on the display.	Power failure	Reset the time.
The appliance is not operating. A cooking time is shown on the display.	The rotary selector has been accidentally turned.	Press the "stop" button.
	The "start" button has not been pressed after the setting was applied.	Press the "start" button or cancel the setting by pressing the "stop" button.
The microwave is not working.	The door has not been properly closed.	Check whether food remnants or debris is/are trapped in the door.
	The "start" button has not been pressed.	Press the "start" button.
It is taking longer than usual for food to heat up	The microwave power output has been set too low.	Select a higher microwave power setting.
	A larger amount of food than usual has been placed in the appliance.	Double the amount – double the time.
	The food was colder than usual.	Stir or turn the food during heating.
The turntable is making a scraping or grinding noise.	Dirt or debris in the area around the turntable drive.	Clean the roller ring and the recess in the cooking compartment.
The microwave has stopped for no apparent reason.	The microwave has a fault.	If this fault recurs, please call the after-sales service.
An **M** is shown on the display.	The appliance is in demo mode	Deactivate demo mode.⟶ *"Basic settings" on page 13*
Error message "E - 3"	Fault in automatic door opening system.	If an error message is displayed, switch the appliance off and on again; if the message disappears, it was a one-off problem. If the fault occurs again or the error message is still displayed, please contact the after-sales service and provide the fault code.

Customer service

Our after-sales service is there for you if your appliance needs to be repaired. We will always find an appropriate solution, also in order to avoid after-sales personnel having to make unnecessary visits.

E number and FD number

When calling us, please quote the full product number (E no.) and the production number (FD no.) so that we can provide you with the correct advice. The rating plate bearing these numbers can be found on the right-hand side when you open the cooking compartment door.

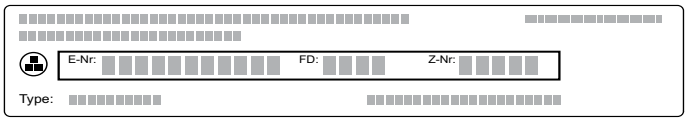

To save time, you can make a note of the numbers for your appliance and the telephone number of the after-sales service in the space below in case you need them.

E no.		**FD no.**	

After-sales service ☎	

Please note that a visit from an after-sales service engineer is not free of charge in the event that the appliance has been misused, even during the warranty period.

Please find the contact data of all countries in the enclosed customer service list.

To book an engineer visit and product advice

GB 0344 892 8979
Calls charged at local or mobile rate.

IE 01450 2655
0.03 € per minute at peak. Off peak 0.0088 € per minute.

Rely on the professionalism of the manufacturer. You can therefore be sure that the repair is carried out by trained service technicians who carry original spare parts for your appliances.

This appliance corresponds to the standards EN 55011 and CISPR 11. It is a Group 2, Class B product.

Group 2 means that microwaves are produced for the purpose of heating food. Class B states that the appliance is suitable for private households.

Technical specifications

Input voltage	220-230 V AC, 50 Hz
Power consumption	1450 W
Max. output power	900 W (IEC 60705)
Microwave frequency	2450 MHz
Circuit breaker/fuse rating	10 A
Dimensions (H/W/D)	
- Appliance	382 x 594 x 388 mm
- Cooking compartment	208 x 328 x 369 mm
VDE approved	Yes
CE mark	Yes

Tested for you in our cooking studio

In the table below, you will find a selection of dishes and the ideal settings for them. It tells you which microwave power setting is best suited to your dish. We have listed some tips with regard to cookware and preparation methods.

Notes

- The times specified in the tables are intended as a guide only.They will depend on the quality and composition of the food.
- Time ranges are often specified in the tables. Set the shortest time to begin with, and then extend the time if necessary.
- Always use an oven cloth or oven gloves when taking hot cookware out of the cooking compartment.

It may be that you have different quantities from those specified in the tables. There is a rule of thumb for operating the microwave: Double the amount = almost double the time, half the amount = half the time.

Always place the cookware on the turntable.

The following tables provide you with numerous options and settings for the microwave.

Suitable ovenware

Suitable dishes are heat-resistant ovenware made of glass, glass ceramic, porcelain, ceramic or heat-resistant plastic. These materials allow microwaves to pass through.

You can also use serving dishes. This saves you having to transfer food from one dish to another. You should only use ovenware with decorative gold or silver trim if the manufacturer guarantees that they are suitable for use in microwaves.

Unsuitable cookware

Metal cookware is unsuitable. Metal does not allow microwaves to pass through. Food in covered metal containers will remain cold.

Caution!

Sparks: Metal, e.g. a spoon in a glass, must be kept at least 2 cm from the oven walls and the inside of the door. Sparks could irreparably damage the glass on the inside of the door.

Defrosting

Place the frozen food in an open container on the turntable.

Delicate parts such as the legs and wings of chicken or fatty outer layers of roasts can be covered with small pieces of aluminium foil. The foil must not touch the sides of the cooking compartment. You can remove the foil half way through the defrosting time.

Liquid will be produced when defrosting meat or poultry. Drain off this liquid when turning meat and poultry and under no circumstances use it for other purposes or allow it to come into contact with other foods.

Turn or stir the food once or twice during the defrosting time. Large pieces of food should be turned several times.

Leave defrosted items to stand at room temperature for a further 10 to 20 minutes so that the temperature can even out. The giblets can be removed from poultry at this point. The meat can also be processed further when a small part of the core is frozen.

Tips for defrosting

The time has elapsed but the food is not defrosted, hot or cooked.	Set a longer time. Large quantities and food which is piled high require longer times.
Time has elapsed but the food is overheated at the edge and not done in the middle.	Stir it during the cooking time and next time, select a lower microwave power setting and a longer cooking time.
After defrosting, the poultry or meat is defrosted on the outside but not defrosted in the middle.	Next time, select a lower microwave power setting. If you are defrosting a large quantity, turn it several times.

Defrosting	Weight	Microwave power setting in watts	Cooking time in minutes	Notes
Whole pieces of beef, veal or pork (on the bone or boned)	800 g	180 90	15 10-20	-
	1 kg	180 90	20 15-25	
	1.5 kg	180 90	30 20-30	

Defrosting	Weight	Microwave power setting in watts	Cooking time in minutes	Notes
Meat in pieces or slices of beef, veal or pork	200 g	180 90	2 4-6	Separate any defrosted parts when turning
	500 g	180 90	5 5-10	
	800 g	180 90	8 10-15	
Minced meat, mixed	200 g	90	10	Freeze food flat if possible Turn several times, remove any defrosted meat
	500 g	180 90	5 10-15	
	800 g	180 90	8 10-20	
Poultry or poultry portions	600 g	180 90	8 10-20	Separate any defrosted parts
	1.2 kg	180 90	15 10-20	
Fish fillet, fish steak or slices	400 g	180 90	5 10-15	Separate any defrosted parts
Vegetables, e.g. peas	300 g	180	10-15	-
Fruit, e.g. raspberries	300 g	180	7-10	Stir carefully during defrosting and separate any defrosted parts
	500 g	180 90	8 5-10	
Butter, defrosting	125 g	180 90	1 2-3	Remove all packaging
	250 g	180 90	1 3-4	
Loaf of bread	500 g	180 90	6 5-10	-
	1 kg	180 90	12 10-20	
Cakes, dry, e.g. sponge cake	500 g	90	10-15	Only for cakes without icing, cream or crème pâtissière, separate the pieces of cake.
	750 g	180 90	5 10-15	
Cakes, moist, e.g. fruit flan, cheesecake	500 g	180 90	5 15-20	Only for cakes without icing, cream or gelatine
	750 g	180 90	7 15–20	

Heating frozen food

Notes

- Take ready meals out of the packaging. They will heat up more quickly and evenly in microwaveable cookware. The different components of the meal may not require the same amount of time to heat up.
- Food which lies flat will cook more quickly than food which is piled high. You should therefore distribute the food so that it is as flat as possible in the cookware. Food should not be placed in layers on top of one another.
- Always cover the food. If you do not have a suitable cover for your cookware, use a plate or special microwave foil.
- Stir or turn the food 2 or 3 times during cooking.
- After heating, allow the food to stand for a further 2 to 5 minutes to allow the temperature to even out.
- Always use an oven cloth or oven gloves when removing cookware from the appliance.

Heating frozen food	Weight	Microwave power settings in watts	Cooking time in minutes	Notes
Menu, plated meal, ready meal (2-3 components)	300-400 g	600	8-11	-
Soup	400 g	600	8-10	-
Stew	500 g	600	10–13	-
Slices or pieces of meat in sauce, e.g. goulash	500 g	600	12-17	Separate the pieces of meat when stirring
Bakes, e.g. lasagne, cannelloni	450 g	600	10-15	-
Side dishes, e.g. rice, pasta	250 g	600	2-5	Add a little liquid
	500 g	600	8-10	
Vegetables, e.g. peas, broccoli, carrots	300 g	600	8-10	Pour water into the dish so that it covers the base
	600 g	600	14-17	
Creamed spinach	450 g	600	11-16	Cook without additional water

Heating food

Caution!

Metal, e.g. a spoon in a glass, must be kept at least 2 cm from the oven walls and the inside of the door. Sparks could irreparably damage the glass on the inside of the door.

Notes

- Take ready meals out of the packaging. They will heat up more quickly and evenly in microwaveable cookware. The different components of the meal may not require the same amount of time to heat up.
- Always cover the food. If you do not have a dedicated lid for your cookware, use a plate or special microwave film.
- Stir or turn the food several times during the heating time. Check the temperature.
- After heating, allow the food to stand for a further 2 to 5 minutes to allow the temperature to even out.
- Always use an oven cloth or oven gloves when removing cookware from the appliance.

⚠ Warning – Risk of scalding!

There is a possibility of delayed boiling when a liquid is heated. This means that the liquid reaches boiling temperature without the usual steam bubbles rising to the surface. Even if the container only vibrates a little, the hot liquid may suddenly boil over and spatter. When heating, always place a spoon in the container. This will prevent delayed boiling.

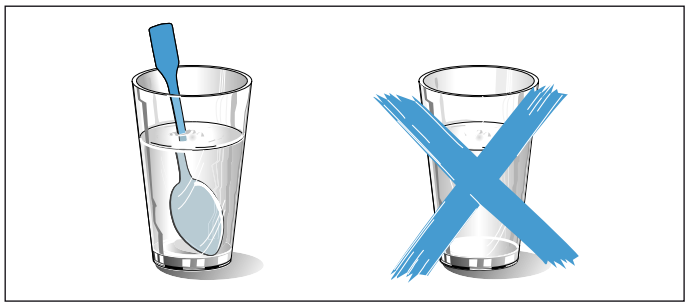

Heating food	Weight	Microwave power setting in watts	Cooking time in minutes	Notes
Beverages	200 ml	900	2-3	Place a spoon in the glass; do not overheat alcoholic drinks; check occasionally while heating
	500 ml	900	3-4	
Baby food, e.g. baby bottles	50 ml	360	approx. ½	Without teats or lids. Always shake well after heating. You must check the temperature
	100 ml	360	approx. 1	
	200 ml	360	1½	
Soup, 1 cup	200 g	600	2-3	-
Soup, 2 cups	400 g	600	4-5	-
Menu, plated meal, ready meal (2-3 components)	350-500 g	600	4-8	-
Meat in sauce	500 g	600	8-11	Separate the slices of meat

Heating food	Weight	Microwave power setting in watts	Cooking time in minutes	Notes
Stew	400 g	600	6-8	-
	800 g	600	8-11	-
Vegetables	150 g	600	2-3	Add a little liquid
	300 g	600	3-5	

Microwave tips

You cannot find any information about the settings for the quantity of food you have prepared.	Increase or reduce the cooking times using the following rule of thumb: Double the amount = almost double the cooking time Half the amount = half the cooking time
The food has become too dry.	Next time, set a shorter cooking time or select a lower microwave power setting. Cover the food and add more liquid.
When the time has elapsed, the food is not defrosted, hot or cooked.	Set a longer time. Large quantities and food which is piled high require longer times.
When the time has elapsed, the food is overheated at the edge but not done in the middle.	Stir it during the cooking time and next time, select a lower microwave power setting and a longer cooking time.
After defrosting, the poultry or meat is defrosted on the outside but not defrosted in the middle.	Next time, select a lower microwave power setting. If you are defrosting a large quantity, turn it several times.

Condensation

Condensation may appear on the door window, interior walls and floor. This is normal. This does not affect how the microwave operates. Wipe away the condensation after cooking.

Test dishes

These tables have been produced for test institutes to facilitate the inspection of the appliance.

In accordance with EN 60705:2012, IEC 60705:2010 and EN 60350-1:2013 or IEC 60350-1:2011

Microwave cooking

Dish	Microwave power output in watts, cooking time in minutes	Note
Custard, 750 g	360 W, 12-17 mins + 90 W, 20-25 mins	Place a 20 x 25 cm Pyrex dish onto the turntable.
Sponge	600 W, 8-10 mins	Place a 22 cm Pyrex dish onto the turntable.
Meat loaf	600 W, 20-25 mins	Place a Pyrex dish onto the turntable.

Microwave defrosting

Dish	Microwave power output in watts, cooking time in minutes	Note
Meat	180 W, 5-7 mins + 90 W, 10-15 mins	Place a 22 cm Pyrex dish onto the turntable.

Thank you for buying a Bosch Home Appliance!

Register your new device on MyBosch now and profit directly from:

- **Expert tips & tricks for your appliance**
- **Warranty extension options**
- **Discounts for accessories & spare-parts**
- **Digital manual and all appliance data at hand**
- **Easy access to Bosch Home Appliances Service**

Free and easy registration – also on mobile phones:
www.bosch-home.com/welcome

Looking for help? You´ll find it here.

Expert advice for your Bosch home appliances, need help with problems or a repair from Bosch experts.
Find out everything about the many ways Bosch can support you:
www.bosch-home.com/service
Contact data of all countries are listed in the attached service directory.

Robert Bosch Hausgeräte GmbH
Carl-Wery-Straße 34
81739 München
Germany
www.bosch-home.com

9001291296
980828(04)