Motors gewählt. Wird die Taste ungefähr 2 Sekunden lang gedrückt, so kommt der Motor zum Stillstand.

Taste R = Reset der Fett- und der Kohlefilter. Bei Eintritt des Filteralarms (Einschalten des mittleren Segments auf dem Display) ist der Fettfilter (nach 30 Betriebsstunden) zu reinigen. Blinkt das mittlere Segment auf, so ist der Fettfilter zu reinigen und der Kohlefilter auszuwechseln (nach Ablauf von 120 Betriebsstunden). Wenn hingegen Ihre Haube keine Umluftversion ist und daher keinen Kohlefilter hat, ist nur der Fettfilter zu reinigen, egal ob das mittlere Segment ununterbrochen angezeigt wird oder nur blinkt. Der Filteralarm erscheint bei ausgeschaltetem Motor und ist ungefähr 30 Sekunden lang sichtbar. Zur Wiederaufnahme der Stundenzählung muss während der Anzeige des Alarms die Taste 2 Sekunden lang gedrückt werden.

Mit besonderer Sorgfalt ist der **Fettfilter** zu behandeln: Der Fettfilter ist jeweils nach etwa 30 Betriebsstunden zu reinigen (wenn das mittlere Segment auf dem Display ununterbrochen aufleuchtet oder blinkt). Entfernen des Filters: den Festhalter in der Nähe des Griffs nach innen drücken und den Filter nach unten ziehen. Den Filter mit einem neutralen Reinigungsmittel waschen. Nach Wiedereinsetzen des gereinigten Filters 2 Sekunden lang die Taste R (Reset) drücken, damit die Zählung neu beginnt. Weitere Informationen erhalten Sie unter dem Stichwort "Bedienung" im Abschnitt "Funktionsweise".

Auswechseln des Kohlefilters: Wird ein Gerät in Umluftversion eingesetzt, so muss der Kohlefilter ausgewechselt werden: den Festhalter nach innen drücken (Abb. 18) und den Filter nach unten drehen, bis die beiden Federn aus ihrem jeweiligen Sitz entfernt werden können. Sie müssen den Kohlefilter jedesmal dann auswechseln, wenn das mittlere Segment blinkt (d. h. nach jeweils 120 Betriebsstunden).

Beleuchtung: Um Halogenlampen zu ersetzen, den Deckel durch Einwirken auf die entsprechenden Schlitze öffnen (Abb.20). Durch Lampen derselben Art ersetzen.

English

WARNING

- *The distance between the supporting surface for the cooking vessels on the hob and the lower part of the hood must be at least 65 cm. If the instructions for installation for the hob specify a greater distance, this has to be taken into account.*
- *The air collected must not be conveyed into a duct used to blow off smokes from appliances fed with an energy other than electricity (central heating systems, thermosiphons, water-heaters, etc.).*
- *Comply with the official instructions provided by the competent authorities in merit when installing the disposal duct. In addition, exhaust air should not be discharged into a wall cavity, unless the cavity is designed for that purpose.*
- *The room must be well aerated in case a hood and some other heat equipment fed with an energy other than electricity (gas, oil, coal heaters, etc) operate at the same time.*
  In fact the intake hood, disposing of air, could create a vacuum in the room. The vacuum should not exceed 0,04mbar. This prevents the gas exhausted by the heat source from being intaken again. It is therefore advisable to ensure the room contains air taps able to ensure a steady flow of fresh air.
- ***Check the data label inside the appliance; if the symbol (⧈) is printed, read the following: this appliance has such technical particulars that it belongs to class II insulation, therefore it must not be earthed.***
  The following warning is valid in the United Kingdom only: in case your cable is not furnished with a plug, read the following instructions; as the colours of the wires in the mains lead of this appliance may not correspond with the coloured markings identifying the terminals in your plug, proceed as follows: – the wire which is coloured blue must be connected to the terminal which is marked with the letter N or coloured black; – the wire which is coloured brown must be connected to the terminal which is marked with the letter L or coloured red. – terminal of a three-pin plug.
- ***Check the data label inside the appliance; if the symbol (⧈) is NOT printed, read the following: ATTENTION: This appliance must be earthed.***
  When making the electrical connections, check that the current socket has a ground connection.
  The following warning is valid in the United Kingdom only: in case your cable is not furnished with a plug, read the following instructions; as the colours of the wires in the mains lead of this appliance may not correspond with the coloured markings identifying the terminals in your plug, proceed as follows:
  – the wire which is coloured green and yellow must be connected to the terminal in the plug which is marked with the letter E or by the earth symbol [⏚], or coloured green or green and yellow; – the wire which

Downloaded from www.Manualslib.com manuals search engine

is coloured blue must be connected to the terminal which is marked with the letter N or coloured black; – the wire which is coloured brown must be connected to the terminal which is marked with the letter L or coloured red.

- *When making the electrical connections, check that the voltage values correspond to those indicated on the data plate inside the appliance itself. In case your appliance is not furnished with a non separating flexible cable and has no plug, or has not got any other device ensuring omnipolar disconnection from the electricity main, with a contact opening distance of at least 3 mm, such separating device ensuring disconnection from the main must be included in the fixed installation. If your unit features a power lead and plug, position this so the plug is accessible.*
- *Always switch off the electricity supply before carrying out any cleaning or servicing operations on the appliance.*

USE

- *Avoid using materials which could cause spurts of flame (flambées) near the appliance.*
- *When frying, take particular care to prevent oil and grease from catching fire. Already used oil is especially dangerous in this respect. Do not use uncovered electric grates.*
- *To avoid possible risks of fire always comply with the indicated instructions when cleaning anti-grease filters and when removing grease deposits from the appliance.*

MAINTENANCE

- *Thorough servicing guarantees correct and long-lasting operation.*
- *Any fat deposits should be removed from the appliance periodically depending on amount of use (at least every 2 months). Avoid using abrasive or corrosive products. To clean painted appliances on the outside, use a cloth dipped in lukewarm water and neutral detergent. To clean steel, copper or brass appliances on the outside, it is always best to use specific products, following the instructions on the products themselves. To clean the inside of the appliance, use a cloth (or brush) dipped in denatured ethyl alcohol.*

DESCRIPTION

The unit can be found in filtering hoods, ducting hoods or in hoods with an outside motor. In the **Filtering version** the air and the kitchen fumes that are conveyed by the apparatus are depurated by the charcoal filter and put back into the room through the small grilles of the ventilation flue (Fig. 1). ATTENTION: When using the filtering version, a charcoal filter and an air baffle (Fig. 1A) must be used, which placed at the top of the structure, allows the air to recycle back into the room. In the **Ducting version**, cooking vapours and odours are conveyed straight outside by a disposal duct which passes through the ceiling (Fig. 2). In the hoods with an **outside motor** (Fig. 3), a vacuum suction unit must be connected; this exhaust will operate separately, conveying the exhaust air through the unit. **Only use vacuum units suggested in the original catalogue.**

INSTALLATION

ATTENTION: Two persons are required for proper installation; the unit should be installed by a qualified operator. Also follow carefully each step of the assembly instructions, and once installation has been completed, make sure that the hood is firmly secured in place.

To facilitate installation, before starting remove the **grease filter**: press inward on the clamp at the handle and pull the filter downward (Fig. 4).

For assembling it is essential to: – Prepare the connection to the mains within the telescopic flue. – If your unit is installed in an ducting hood or in a hood with outside motor, prepare the air exhaust hole.

When installing ducting hoods and hoods with outside motor, to achieve the best possible conditions use an **air exhaust pipe** that : is as short as possible, has a minimum of curves (maximum angle: 90°), is made of a material that complies with the standards (which vary from nation to nation) and iv) is smooth on the inside. It is also advisable to avoid any drastic changes in pipe section (diameter: 150 mm).

ASSEMBLING - Using the special drilling template, drill the holes for fixing to the ceiling on the vertical side of your hob. Carefully observe all the indications for final positioning of the apparatus. Take into account that one of the template axes must correspond to the axis of the hood controls. Fix the bracket to the ceiling using the screws and screw anchors provided (Fig. 5). Be careful, because the position of the bracket determines the final position of the apparatus: the side with the slot B corresponds to the side opposite the commands.

Ducting version and version with an external motor: Fix the telescopic structure to the bracket by means of 4 screws (provided), running the air evacuation pipe through the telescopic structure and the electric power cable through the special hole in the bracket (Fig. 6). Adjust the height of the telescopic structure by means of the four retaining screws C (Fig. 7), taking into account that the height of the hood is 70 mm and that the distance between the hood and the hob must be at least 650 mm (Fig. 8). Take the upper pipe (with the round slots) and fit it on the telescopic structure with the slots facing downwards; fit the pipe to the bracket with 2 screws (Fig. 9). Take the lower pipe and fit it in the same manner as before; slide it to the top and stop it in that position using a screw inserted in the hole of the upper pipe as a catch (Fig. 10).

Mount the plate of the electrical system fixing it with 3 screws (Fig. 11).

Fit the hood to the telescopic structure by means of 4 screws (provided) – Fig. 12.

Through the openings D (Fig. 12) fix the air evacuation pipe to the air outlet mouth of the hood.

Only for models with outside motor (Fig. 13): plug the hood into the outside control unit using the special terminal block: remove wire clamp A and lid B from the wiring junction box; secure the wire connecting the control unit to

Downloaded from www.Manualslib.com manuals search engine

terminal C; then replace wire clamp A and lid B on the wiring junction box; the other end of the wire is secured to the terminal block on the outside control unit.
Make the electrical connection by means of the power cable. Remove the screw used as catch and slide the lower pipe downwards, placing it gently on the apparatus.
Installation is now complete and the anti-grease filter can be remounted.
Filtering version: Fix the telescopic structure to the bracket by means of 4 screws (provided), running the electric power cable through the special hole in the bracket (Fig. 6). Adjust the height of the telescopic structure by means of the four retaining screws C (Fig. 7), taking into account that the height of the hood is 86 mm and that the distance between the hood and the hob must be at least 650 mm (Fig. 8). Insert the air baffle in the structure (Fig.14). Through the openings E (Fig.14), fit the flange to the baffle locking it with a turning movement. Fix a flexible pipe to the flange for air evacuation (Fig. 15). Take the upper pipe (with the round slots) and fit it on the telescopic structure with the slots facing upwards; fit the pipe to the bracket with 2 screws (Fig. 16). Take the lower pipe and fit it in the same manner as before; slide it to the top and stop it in that position using a screw inserted in the hole of the upper pipe as a catch (Fig. 10).
Mount the plate of the electrical system fixing it with 3 screws (Fig. 11).
Fit the hood to the telescopic structure by means of 4 screws (provided) – Fig. 17.
Through the openings D, mount the flange (provided) on the air outlet mouth of the hood (Fig. 17). Then fit the air evacuation pipe to the flange. Make the electrical connection by means of the power cable. Remove the screw used as catch and slide the lower pipe downwards, placing it gently on the apparatus. Install the charcoal filter clipping the 2 filter clips into place (Fig. 18) and turn the filter upwards.
Installation is now complete and the anti-grease filter can be remounted.

OPERATION

Commands (Fig. 19)**:**
Button A = turns the lights on/off.
Button B = turns the TIMER on/off: press once to turn the timer on, therefore, after 5 minutes, the motor cuts out (at the same time the selected speed blinks on the display); the timer remains on if the motor speed is changed.
Display C =
- indicates the selected motor speed (from 1 to 4);
4: intensive speed.
- indicates Timer On when the number blinks;
- indicates Filter Alarm when the central segments is on or blinking.
Button D = makes the motor work (at the last speed selected); pushing the button again, the speeds of the motor are sequentially selected from 1 to 4; keeping this button pressed for about 2 seconds shuts down the motor.
Button R = resets the grease filters or charcoal filters; when the filter alarm appears (i.e. when the central segment on the display goes on), the grease filter must be cleaned (30 hours of operation); when the central segment starts blinking, the grease filter must be cleaned and the charcoal filter replaced (120 hours of operation). Obviously, if the hood is not a filtering model and does not have a charcoal filter , clean the grease filter both when the central segment goes on and when it starts blinking. The filter alarm can be seen when the motor is off and for about 30 seconds. To reset the hour counter, keep the button pressed for 2 seconds while the alarm can be seen.

Pay special attention to the **grease filter**: the grease filter must be cleaned approximately once every 30 hours of operation (when the central segment on the display goes on or starts blinking). To remove the filter: press inward on the clamps at the handles and pull the filter downward. Wash out the filter using a neutral soap. Once the cleaned filter is reinstalled, keep button R (Reset) pressed for two seconds to reset the counter. For further information, see the Commands in the paragraph entitled “Operation”.

Replacing the charcoal filter: If the unit is a filtering hood, the charcoal filter must be replaced: to remove it press inward on the clamp (Fig. 18) and rotate the filter downward until the 2 tabs can be removed from the housing.
The charcoal filter must be replaced whenever the central segment of the display starts blinking (i.e. every 120 hours of operation).

Lighting: to change the halogen bulbs open the cover levering from the proper slots (Fig. 20). Replace with bulbs of the same type.

Downloaded from www.Manualslib.com manuals search engine

1

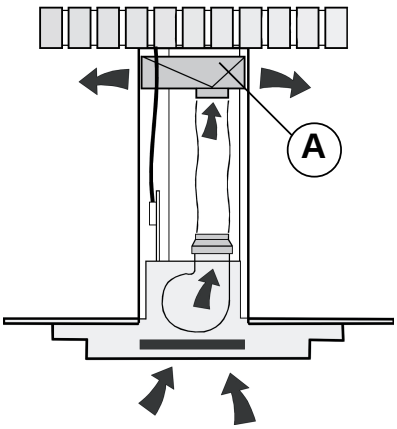

2

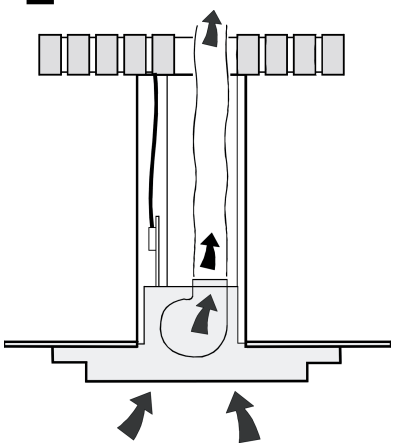

3

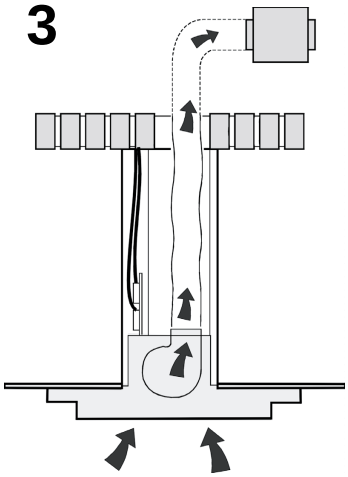

4

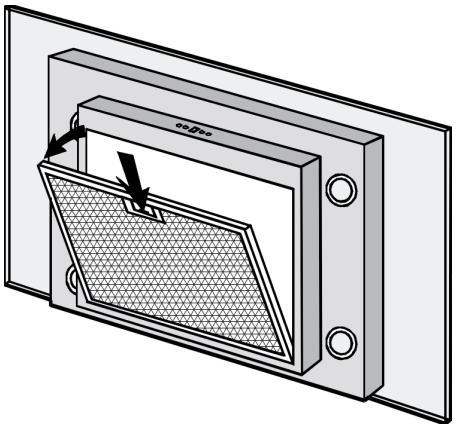

5

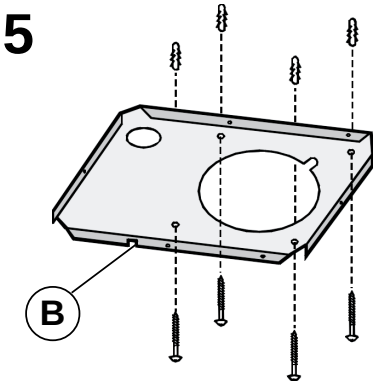

6

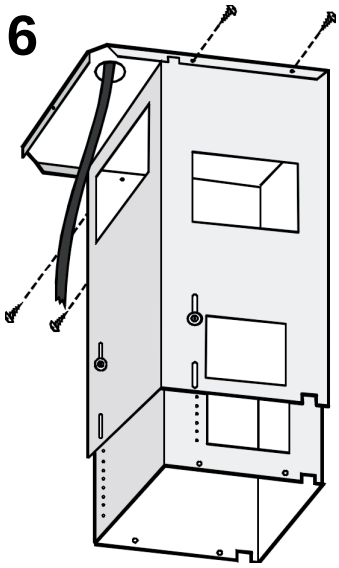

7

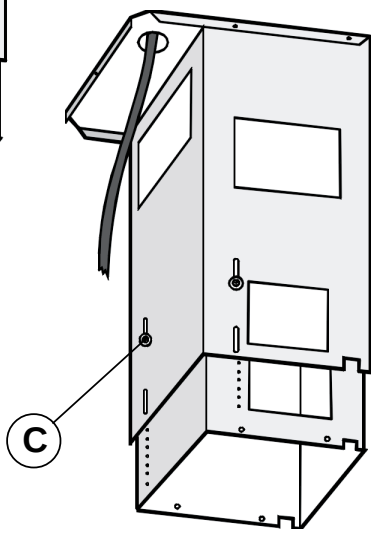

8

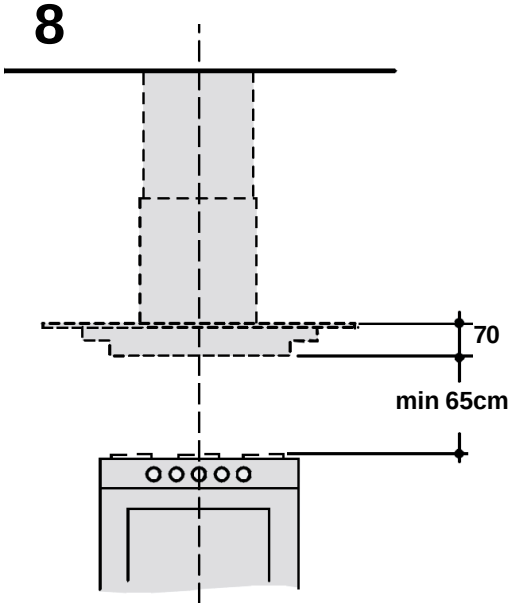

Downloaded from www.Manualslib.com manuals search engine

9

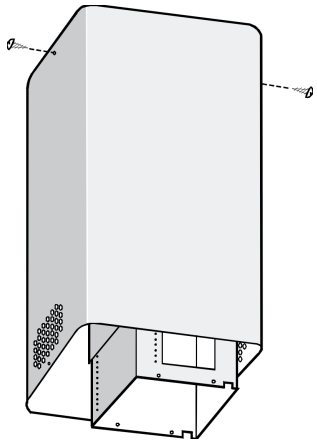

10

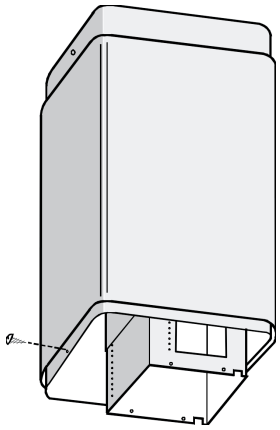

11

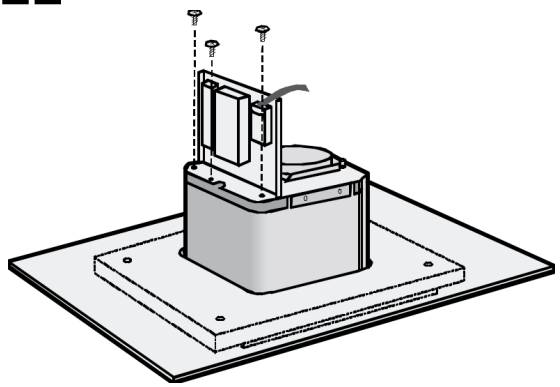

12

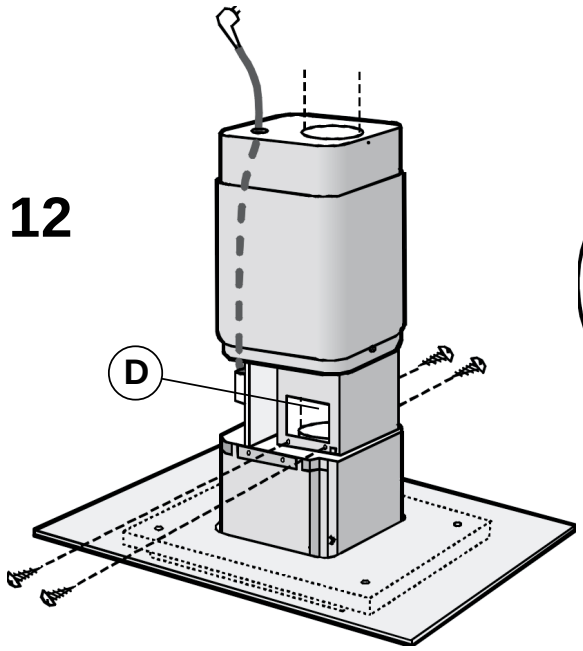

13

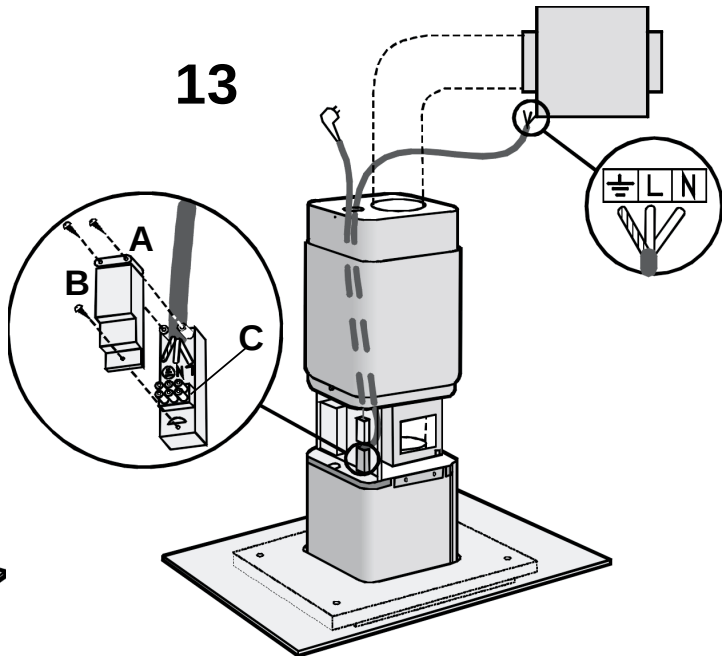

14

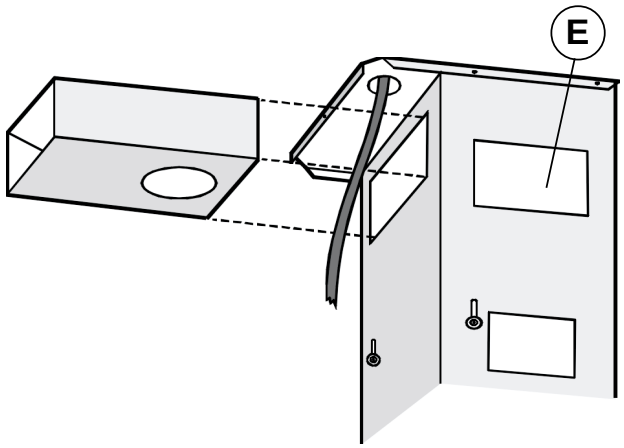

15

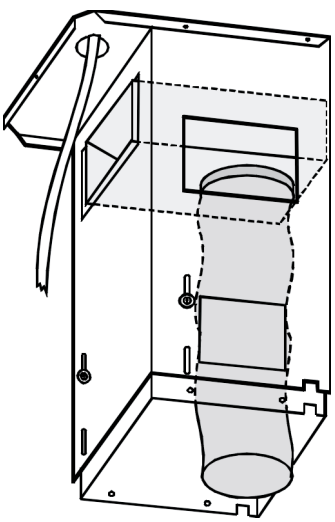

Downloaded from www.Manualslib.com manuals search engine

16

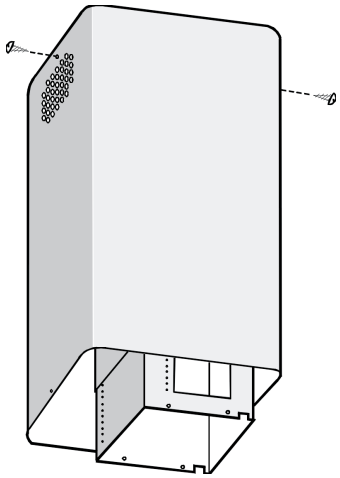

17

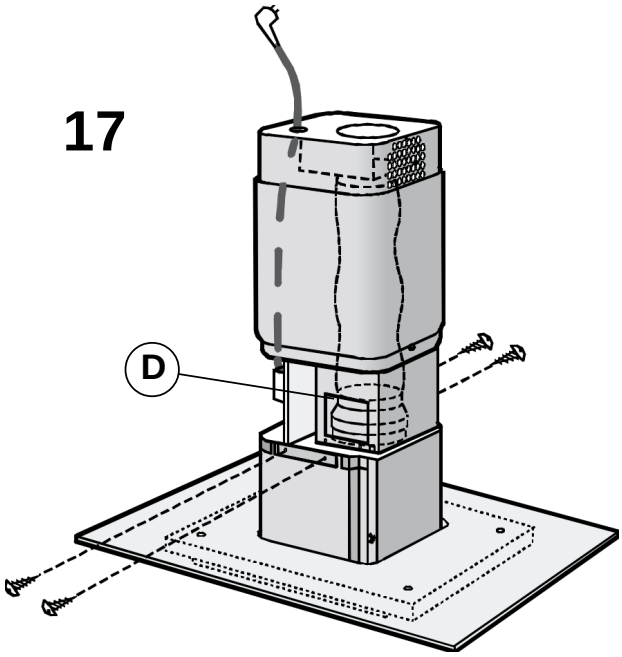

18

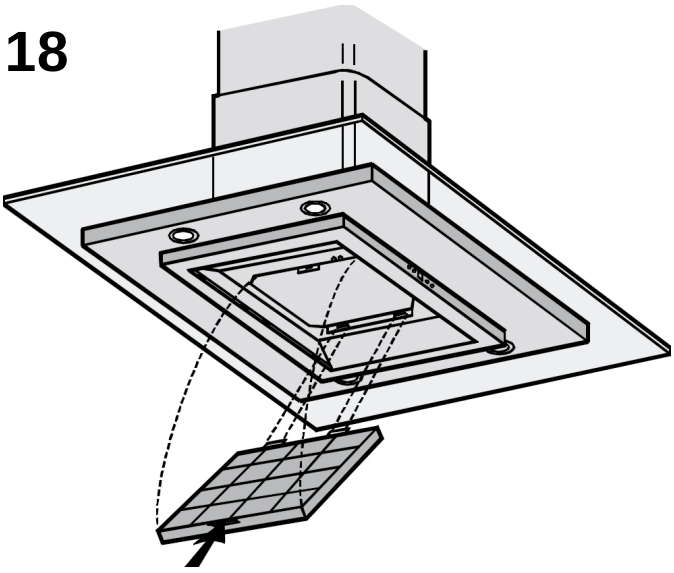

19

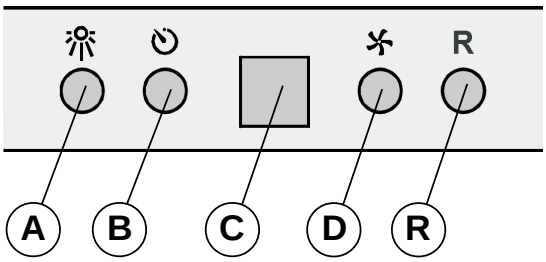

20

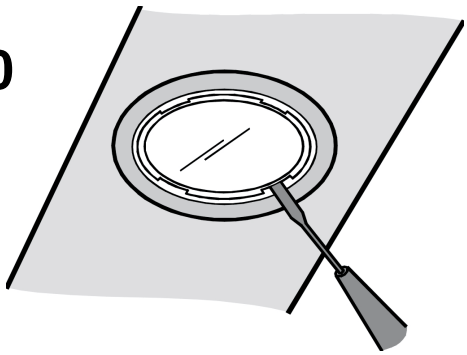

Downloaded from www.Manualslib.com manuals search engine