Refrigerator

User manual

RS58K*/RS62K*

Free Standing Appliance

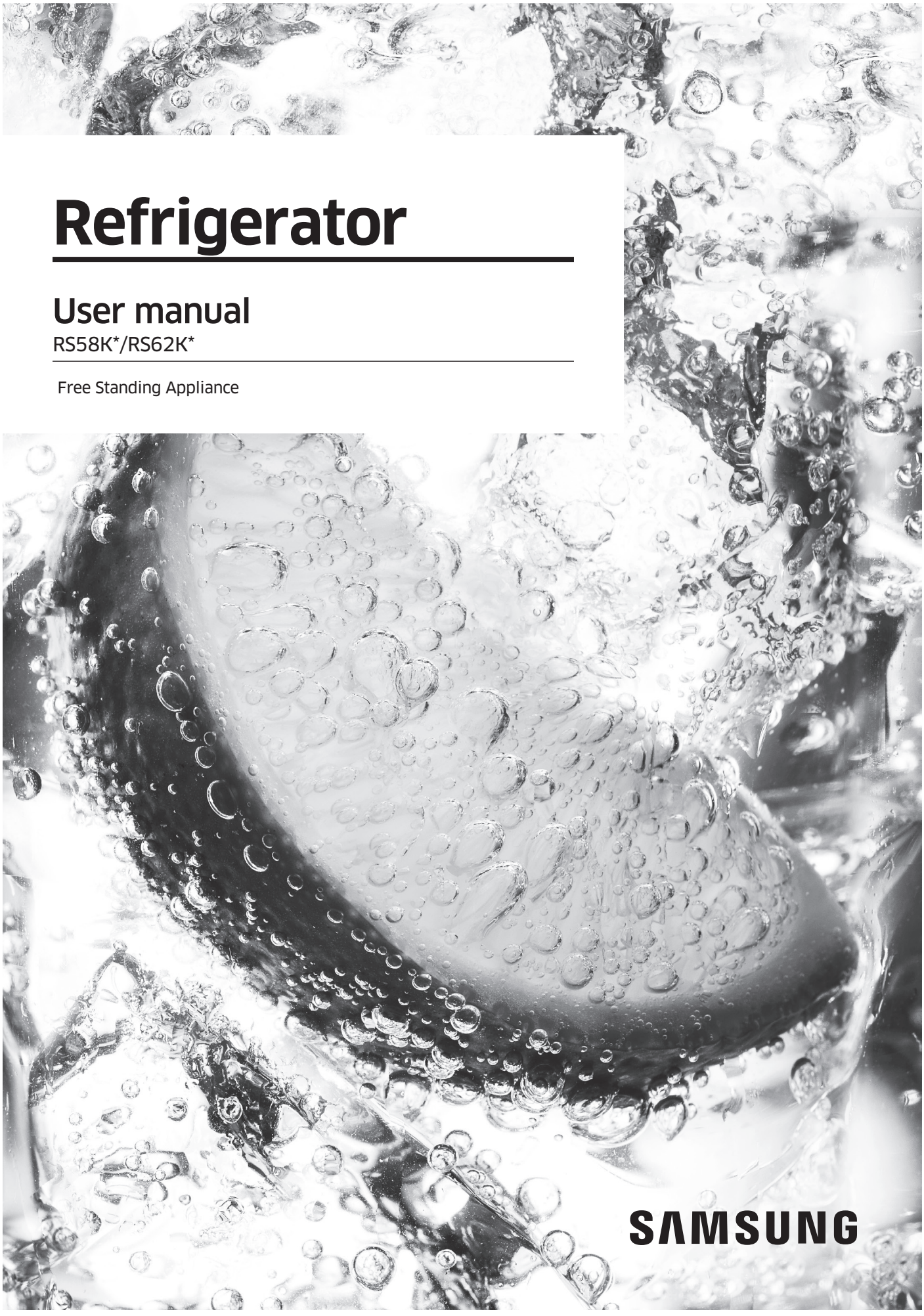

Untitled-30 1

7/17/2017 5:03:56 PM

Contents

Safety information 3

Important safety symbols and precautions: 5
Severe warning signs for transportation and site 6
Critical installation warnings 7
Installation cautions 10
Critical usage warnings 11
Usage cautions 16
Cleaning cautions 19
Critical disposal warnings 21
Additional tips for proper usage 22
Saving Energy Tips 23
This appliance is intended to be used in household and similar applications such as 23
Instructions about the WEEE 24

Installation 25

Refrigerator at a glance 25
Step-by-step installation 28
Door removal for entrance 36

Operations 41

Feature panel 41
Temperature settings 45
Special features 46

Maintenance 53

Handle and care 53
Cleaning 57
Replacement 58

Troubleshooting 60

General 60

Untitled-30 2 7/17/2017 5:03:56 PM

Safety information

- Before using your new Samsung Refrigerator, please read this manual thoroughly to ensure that you know how to operate the features and functions that your new appliance offers safely and efficiently.
- This appliance is not intended for use by persons (including children) with reduced physical, sensory, or mental capabilities, or those who lack experience and knowledge, unless they have been given supervision or instruction concerning the use of the appliance by a person responsible for their safety.
- This appliance can be used by children aged from 8 years and above and persons with reduced physical, sensory or mental capabilities or lack of experience and knowledge if they have been given supervision or instruction concerning use of the appliance in a safe way and understand the hazards involved.
  Children shall not play with the appliance. Cleaning and user maintenance shall not be made by children without supervision.
- Warnings and Important Safety Instructions in this manual do not cover all possible conditions and situations that may occur.
  It is your responsibility to use common sense, caution, and care when installing, maintaining, and operating your appliance.
- Because these following operating instructions cover various models, the characteristics of your refrigerator may differ slightly from those described in this manual and not all warning signs may be applicable. If you have any questions or concerns, contact your nearest service center or find help and information online at www.samsung.com.
- R-600a or R-134a is used as a refrigerant. Check the compressor label on the rear of the appliance or the rating label inside the fridge to see which refrigerant is used for your refrigerator. When this product contains flammable gas (Refrigerant R-600a), contact your local authority in regard to safe disposal of this product.

Untitled-30 3 7/17/2017 5:03:56 PM

Safety information

- In order to avoid the creation of a flammable gas-air mixture if a leak in the refrigerating circuit occurs, the size of the room in which the appliance may be sited depends on the amount of refrigerant used.
- Never start up an appliance showing any signs of damage. If in doubt, consult your dealer. The room must be 1 m^3 in size for every 8 g of R-600a refrigerant inside the appliance.
  The amount of refrigerant in your particular appliance is shown on the identification plate inside the appliance.
- Refrigerant squirting out of the pipes could ignite or cause an eye injury. When refrigerant leaks from the pipe, avoid any naked flames and move anything flammable away from the product and ventilate the room immediately.
  - Failing to do so may result in fire or explosion.

Untitled-30 4 7/17/2017 5:03:56 PM

Important safety symbols and precautions:

Please follow all safety instructions in this manual. This manual uses the following safety symbols.

⚠ WARNING

Hazards or unsafe practices that may result in **severe personal injury, property damage, and/or death**.

⚠ CAUTION

Hazards or unsafe practices that may result in **severe personal injury and/or property damage**.

NOTE

Useful information that helps users understand or benefit from the refrigerator.

These warning signs are here to prevent injury to you and others.

Please follow them carefully.

After reading this section, keep it in a safe place for future reference.

Untitled-30 5 7/17/2017 5:03:56 PM

Safety information

Severe warning signs for transportation and site

⚠ WARNING

- When transporting and installing the appliance,care should be taken to ensure that no parts of the refrigerating circuit are damaged.
  - Refrigerant leaking from the pipe work could ignite or cause an eye injury. If a leak is detected, avoid any naked flames or potential sources of ignition and air the room in which the appliance is standing for several minutes.
  - This appliance contains a small amount of isobutane refrigerant (R-600a), a natural gas with high environmental compatibility that is, however, also combustible. When transporting and installing the appliance, care should be taken to ensure that no parts of the refrigerating circuit are damaged.
- When transporting and installing the refrigerator, do not touch the water hose on the back side of the refrigerator.
  - This may damage the refrigerator and as a result the water dispenser can not be used.

Untitled-30 6 7/17/2017 5:03:56 PM

Critical installation warnings

⚠ WARNING

- Do not install the refrigerator in a damp location or place where it may come in contact with water.
  - Deteriorated insulation on electrical parts may cause an electric shock or fire.
- Do not place this refrigerator in direct sunlight or expose it to the heat from stoves, room heaters, or other appliances.
- Do not plug several appliances into the same multiple power strip. The refrigerator should always be plugged into its own individual electrical outlet which has a voltage rating that matches the voltage listed on the refrigerator's rating plate.
  - This provides the best performance and also prevents overloading of house wiring circuits, which could cause a fire hazard from overheated wires.
- If the wall socket is loose, do not insert the power plug.
  - There is a risk of electric shock of fire.
- Do not use a power cord that has cracks or abrasion damage along its length or at either end.
- Do not bend the power cord excessively or place heavy objects on it.
- Do not pull or excessively bend the power cord.
- Do not twist or tie the power cord.
- Do not hook the power cord over a metal object, place a heavy object on the power cord, insert the power cord between objects, or push the power cord into the space behind the appliance.
- When moving the refrigerator, be careful not to roll over or damage the power cord.
  - This may result in an electric shock or fire.

Untitled-30 7 7/17/2017 5:03:56 PM

Safety information

- Never unplug your refrigerator by pulling on the power cord. Always grip the plug firmly and pull straight out from the outlet.
  - Damage to the cord may cause a short-circuit, fire, and/or electric shock.
- Do not use aerosols near the refrigerator.
  - Using aerosols near the refrigerator may cause an explosion or fire.
- Do not install this appliance near a heater or inflammable material.
- Do not install this appliance in a location where gas may leak.
  - This may result in an electric shock or fire.
- This refrigerator must be properly located and installed in accordance with the instructions in this manual before you use it.
- Connect the power plug in the proper position with the cord hanging down.
  - If you connect the power plug upside down, the wire can get cut off and cause a fire or electric shock.
- Make sure that the power plug is not crushed or damaged by the back of the refrigerator.
- Keep the packing materials out of reach of children.
  - There is a risk of death from suffocation if a child puts the packing materials on his or her head.
- The appliance must be positioned so that the plug is accessible after installation.
  - Failing to do so may result in an electric shock or fire due to electric leakage.
- Do not install this appliance in a humid, oily or dusty location, in a location exposed to direct sunlight and water (rain drops).
  - Deteriorated insulation of electrical parts may cause an electric shock or fire.

Untitled-30 8 7/17/2017 5:03:56 PM

- If any dust or water is in the refrigerator, pull out power plug and contact your Samsung Electronics service center.
  - Otherwise there is a risk of fire.
- Do not stand on top of the appliance or place objects (such as laundry, lighted candles, lighted cigarettes, dishes, chemicals, metal objects, etc.) on the appliance.
  - This may result in an electric shock, fire, problems with the product, or injury.
- You need to remove all the protective plastic film before you initially plug the product in.
- Children should be supervised to ensure that they do not play with the snap rings used for door adjustment or the water tube clips.
  - There is risk of death by suffocation if a child swallows a snap ring or water tube clip. Keep the snap rings and water tube clips out of children's reach.
- The refrigerator must be safely grounded.
  - Always make sure that you have grounded the refrigerator before attempting to investigate or repair any part of the appliance. Power leakages can cause severe electric shock.
- Never use gas pipes, telephone lines, or other potential lightning attractors as an electrical ground.
  - You must ground the refrigerator to prevent any power leakages or electric shocks caused by current leakage from the refrigerator.
  - This may result in an electric shock, fire, explosion, or problems with the product.
- Plug the power plug into the wall socket firmly. Do not use a damaged power plug, damaged power cord, or loose wall socket.
  - This may result in an electric shock or fire.

Untitled-30 9 7/17/2017 5:03:56 PM

Safety information

- If the power cord is damaged, have it replaced immediately by the manufacturer or one of its service agents.
- The fuse on the refrigerator must be changed by a qualified technician or service company.
  - Failing to do so may result in an electric shock or personal injury.

Installation cautions

⚠ CAUTION

- Allow sufficient space around the refrigerator and install it on a flat surface.
  - If your refrigerator is not level, cooling efficiency and durability can be declined.
  - Keep the ventilation space in the appliance enclosure or mounting structure clear of obstructions.
- Allow the appliance to stand for 2 hours before loading foods after installation and turning on.
- We strongly recommend you have a qualified technician or service company install the refrigerator.
  - Failing to do so may result in an electric shock, fire, explosion, problems with the product, or injury.

Untitled-30 10 7/17/2017 5:03:56 PM

Critical usage warnings

⚠ WARNING

- Do not insert the power plug into a wall socket with wet hands.
  - This may result in an electric shock.
- Do not store articles on the top of the appliance.
  - When you open or close the door, the articles may fall and cause personal injury and/or material damage.
- Do not insert hands, feet or metal objects (such as chopsticks, etc.) into the bottom or the back of the refrigerator.
  - This may result in an electric shock or injury.
  - Any sharp edges may cause a personal injury.
- Do not touch the inside walls of the freezer or products stored in the freezer with wet hands.
  - This may cause frostbite.
- Do not put a container filled with water on the refrigerator.
  - If spilled, there is a risk of fire or electric shock.
- Do not keep volatile or flammable objects or substances (benzene, thinner, propane gas, alcohol, ether, LP gas, and other such products) in the refrigerator.
  - This refrigerator is for storing food only.
  - This may result in fire or explosion.
- Children should be supervised to ensure that they do not play with the appliance.
  - Keep fingers out of “pinch point” areas. Clearances between the doors and cabinet are necessarily small. Be careful when you open the doors if children are in the area.
- Do not let children hang on the door or door bins. A serious injury may occur.
- Do not let children go inside the refrigerator. They could become trapped.

Untitled-30 11 7/17/2017 5:03:56 PM

Safety information

- Do not insert your hands into the bottom area under the appliance.
  - Any sharp edges may cause personal injury.
- Do not store pharmaceutical products, scientific materials, or temperature sensitive products in the refrigerator.
  - Products that require strict temperature controls must not be stored in the refrigerator.
- Do not place or use electrical appliance inside the refrigerator/ freezer, unless they are of a type recommended by the manufacturer.
- If you smell pharmaceutical or smoke, pull out power plug immediately and contact your Samsung Electronics service center.
- If any dust or water is in Refrigerator, pull out power plug and contact your Samsung Electronics service center.
  - Otherwise there is a risk of fire.
- Do not let children step on a drawer.
  - The drawer may break and cause them to slip.
- Do not leave the doors of the refrigerator open while the refrigerator is unattended and do not let children enter inside the refrigerator.
- Do not allow babies or children go inside the drawer.
  - It can cause death from suffocation by entrapment or personal injury.
- Do not overfill the refrigerator with food.
  - When you open the door, an item may fall out and cause personal injury or material damage.
- Do not spray volatile material such as insecticide onto the surface of the appliance.
  - As well as being harmful to humans, it may also result in an electric shock, fire, or problems with the product.

Untitled-30 12 7/17/2017 5:03:57 PM

- Never put fingers or other objects into the water dispenser hole, ice chute and ice maker bucket.
  - It may cause a personal injury or material damage.
- Do not use or place any substances sensitive to temperature such as flammable sprays, flammable objects, dry ice, medicine, or chemicals near or inside of the refrigerator.
- Do not use a hair dryer to dry the inside of the refrigerator. Do not place a lighted candle in the refrigerator for removing bad odours.
  - This may result in an electric shock or fire.
- Fill the water tank, ice tray and water cubes only with potable water (mineral water or purified water).
  - Do not fill the tank with tea, juice or sports drink, this may damage the refrigerator.
- Do not stand on top of the appliance or place objects (such as laundry, lighted candles, lighted cigarettes, dishes, chemicals, metal objects, etc.) on the appliance. This may result in an electric shock, fire, problems with the product, or injury. Do not put a container filled with water on the appliance.
  - If spilled, there is a risk of fire or electric shock.
- Do not use mechanical devices or any other means to accelerate the defrosting process, other than those recommended by the manufacturer.
- Do not damage the refrigerant circuit.
- Never stare directly at the UV LED lamp for long periods of time.
  - This may result in eye strain due to the ultraviolet rays.
- Do not put fridge shelf in upside down. Shelf stopper could not work.
  - It may cause a personal injury because of glass shelf drop.

Untitled-30 13 7/17/2017 5:03:57 PM

Safety information

- Keep fingers out of “pinch point” areas. Clearances between the doors and cabinet are necessarily small. Be careful when you open the doors if children are in the area.
- If a gas leak is detected, avoid any naked flames or potential sources of ignition, and air the room in which the appliance is standing for several minutes.
  - Do not touch the appliance or power cord.
  - Do not use a ventilating fan.
  - A spark may result in explosion or fire.
- Use only the LED Lamps provided by the manufacturer or its service agents.
- Bottles should be stored tightly together so that they do not fall out.
- This product is intended only for the storage of food in a domestic environment.
- Never put fingers or other objects into the water dispenser hole, ice chute and ice maker bucket.
  - It may cause a personal injury or material damage.
- Do not attempt to repair, disassemble, or modify the refrigerator yourself.
- Do not use any fuse (such as cooper, steel wire, etc.) other than a standard fuse.
- If your refrigerator needs to be repaired or reinstalled, contact your nearest service center.
  - Failing to do so may result in an electric shock, fire, problems with the product, or injury.
- If the interior or exterior LED lamp has gone out, contact your nearest service center.

Untitled-30 14 7/17/2017 5:03:57 PM

- If the refrigerator emits a burning smell or smoke, unplug the refrigerator immediately and contact your Samsung Electronics service center.
  - Failing to do so may result in an electric or fire hazards.
- Pull the power plug out of the socket before changing the interior lamps of the refrigerator.
  - Otherwise, there is a risk of electric shock.
- If you experience difficulty changing a non-LED light, contact a Samsung service center.
- If the product is equipped with LED lamps, do not disassemble the Lamp Covers and LED lamps yourself.
  - Contact a Samsung service center.
- Plug the power plug into the wall socket firmly.
- Do not use a damaged power plug, damaged power cord or loose wall socket.
  - This may result in an electric shock or fire.

Untitled-30 15 7/17/2017 5:03:57 PM

Safety information

Usage cautions

⚠ CAUTION

- Do not re-freeze frozen foods that have thawed completely. Do not place carbonated or fizzy drinks in the freezer compartment. Do not put bottles or glass containers in the freezer.
  - When the contents freeze, the glass may break and cause personal injury.
- Use only the ice maker provided with the refrigerator.
- Have the refrigerator's water supply connected only to a potable water supply. To operate the ice maker properly, water pressure of 20 ~ 125 psi (138 ~ 862 kPa) is required. If you will be away from home for a long period of time (on vacation, for example) and won't be using the water or ice dispensers, close the water valve.
  - Otherwise, water leakage may occur.
- If you won't be using the refrigerator for a very long period of time, (3 weeks or more) empty the refrigerator including the ice bucket, unplug it, close the water valve, wipe excess moisture from the inside walls, and leave the doors open to prevent odors and mold.
- To get the best performance from the product:
  - Do not place food too close to the vents at the rear of the refrigerator as this can obstruct free air circulation in the refrigerator compartment.
  - Wrap food up properly or place it in airtight containers before putting it into the refrigerator.
  - Do not place glass bottles or carbonated beverages into the freezer. They can freeze and break. Broken beverage containers can cause injury.
  - Please observe maximum storage times and expiration dates of frozen goods.

Untitled-30 16 7/17/2017 5:03:57 PM

- There is no need to disconnect the refrigerator from the power supply if you will be away for less than three weeks. However, if you will be away for more than three weeks, remove all the food and ice in the ice bucket, unplug the refrigerator, close the water valve, wipe excess moisture from the inside walls, and leave the doors open to prevent odors and mold.

- Do not place glass or bottles or carbonated beverages into the freezer.
  - The container may freeze and break, and this may result in injury.
- Do not place carbonated or fizzy drinks in the freezer compartment. Do not put bottles or glass containers in the freezer.
  - When the contents freeze, the glass may break and cause personal injury and property damage.
- Service Warranty and Modification.
  - Any changes or modifications performed by a 3rd party on this finished appliance are not covered under Samsung warranty service, nor is Samsung responsible for safety issues that result from 3rd party modifications.
- Do not block the air vents inside the refrigerator.
  - If the air vents are blocked, especially with a plastic bag, the refrigerator can be over cooled. If a cooling period lasts too long, the water filter may break and cause water leakage.
- Use only the ice-maker provided with the refrigerator.
- Wipe excess moisture from the inside and leave the doors open.
  - Otherwise, odor and mold may develop.
- If the refrigerator is disconnected from the power supply, you should wait for at least five minutes before plugging it back in.

Untitled-30 17 7/17/2017 5:03:57 PM

Safety information

- If you have a long vacation planned or do not intend to use the refrigerator for a long period of time, (3 weeks or more) empty the refrigerator including the ice bucket, pull out the power plug, close the water valve, wipe excess moisture from the inside walls, and leave the doors open to prevent odors and mold.
- When the refrigerator got wet by water, pull out the power plug and contact your Samsung Electronics service center.
- Do not strike or apply excessive force to any glass surface.
  - Broken glass may result in a personal injury and/or property damage.
- Fill the water tank and ice cube trays with potable water only (tap water, mineral water, or purified water).
  - Do not fill the tank with tea or a sports drink. This may damage the refrigerator.
- Be careful that your fingers are not caught in.
- If the refrigerator is flooded, make sure to contact your nearest service center.
  - There is a risk of electric shock or fire.
- Do not keep vegetable oil in your refrigerator's door bins. The oil can solidify, making it foul-tasting and difficult to use. In addition, the open container can leak and the leaked oil can cause the door bin to crack. After opening an oil container, it is best to keep the container in a cool and shaded place such as a cupboard or pantry.
  - Examples of vegetable oil: olive oil, corn oil, grape-seed oil, etc.

Untitled-30 18 7/17/2017 5:03:57 PM

Cleaning cautions

⚠ CAUTION

- Do not spray water directly on the inside or outside the refrigerator.
  - There is a risk of fire or electric shock.
- Do not use a hair dryer to dry the inside of the refrigerator.
- Do not place a lighted candle in the refrigerator to remove bad odors.
  - This may result in an electric shock or fire.
- Do not spray cleaning products directly on the display.
  - Printed letters on the display may come off.
- If any foreign substance such as water has entered the appliance, unplug the power plug and contact your nearest service center.
  - Failing to do so may result in an electric shock or fire.
- Use a clean, dry cloth to remove any foreign matter or dust from the power plug blades. Do not use a wet or damp cloth when cleaning the plug.
  - Otherwise, there is a risk of fire or electric shock.
- Do not clean the appliance by spraying water directly onto it.
- Do not use benzene, thinner, or Clorox, Chloride for cleaning.
  - They may damage the surface of the appliance and may cause a fire.
- Never put fingers or other objects into the dispenser hole.
  - It may cause a personal injury or material damage.
- Before cleaning or performing maintenance, unplug the appliance from the wall socket.
  - Failing to do so may result in an electric shock or fire.
- Use a clean sponge or soft cloth and a mild detergent in warm water to clean the refrigerator.

Untitled-30 19 7/17/2017 5:03:57 PM

Safety information

- Do not use abrasive or harsh cleansers such as window sprays, scouring cleansers, flammable fluids, muriatic acid, cleaning waxes, concentrated detergents, bleaches, or cleansers containing petroleum products on exterior surfaces (doors and cabinet), plastic parts, door and interior liners, and gaskets.
  - These can scratch or damage the material.
- Do not clean glass shelves or covers with warm water when they are cold. Glass shelves and covers may break if exposed to sudden temperature changes or impacts such as bumping or dropping.

Untitled-30 20 7/17/2017 5:03:57 PM

Critical disposal warnings

⚠ WARNING

- Please dispose of the packaging material from this product in an environmentally friendly manner.
- Ensure that none of the pipes on the back of the refrigerator are damaged prior to disposal.
- R-600a or R-134a is used as a refrigerant. Check the compressor label on the rear of the appliance or the rating label inside the fridge to see which refrigerant is used for your refrigerator. If this refrigerator contains flammable gas (Refrigerant R-600a), contact your local authority in regard to safe disposal of this product.
- When disposing of this refrigerator, remove the door/door seals and door latch so that small children or animals cannot become trapped inside. Children should be supervised to ensure that they do not play with the appliance. If trapped inside, a child may get hurt or suffocate to death.
  - If trapped inside, the child may become injury and suffocate to death.
- Cyclopentane is used in the insulation. The gases in the insulation material require a special disposal procedure. Please contact your local authorities in regard to the environmentally safe disposal of this product.
- Keep all packaging materials well out of the reach of children, as packaging materials can be dangerous to children.
  - If a child places a bag over his or her head, the child could suffocate.

Untitled-30 21 7/17/2017 5:03:57 PM

Safety information

Additional tips for proper usage

- In the event of a power failure, call the local office of your electric company and ask how long the failure is going to last.
  - Most power failures that are corrected in an hour or two will not affect your refrigerator temperatures. However, you should minimize the number of door openings while the power is off.
  - Should the power failure last more than 24 hours, remove and discard all frozen food.
- The refrigerator might not operate consistently (frozen contents can thaw or temperatures can become too warm in the frozen food compartment) if sited for an extended period of time in a location where ambient air temperatures are constantly below the temperatures for which the appliance is designed.
- In case of particular foods, keeping it under refrigeration can have a bad effect on preservation due to its properties.
- Your appliance is frost free, which means there is no need to manually defrost your appliance. This will be carried out automatically.
- Temperature rise during defrosting complies with ISO requirements. If you want to prevent an undue rise in the temperature of frozen food while the appliance defrosts, wrap the frozen food in several layers of newspaper.
- Do not re-freeze frozen foods that have thawed completely.
- The temperature of two star section (sections) or compartment (compartments) which have two star symbol (**) is slightly higher than other freezer compartment (compartments).
  The two star section (sections) or compartment (compartments) is (are) based on the instruction and/or the condition as delivered.

Untitled-30 22 7/17/2017 5:03:57 PM

Saving Energy Tips

- Install the appliance in a cool, dry room with adequate ventilation. Ensure that it is not exposed to direct sunlight and never put it near a direct source of heat (a radiator, for example).
- Not to block any vents and grilles is recommended for energy efficiency.
- Allow warm food to cool down before placing it in the appliance.
- Put frozen food in the refrigerator to thaw. You can then use the low temperatures of the frozen products to cool food in the refrigerator.
- Do not keep the door of the refrigerator open for too long when putting food in or taking food out. The shorter the time the door is open, the less frost build-up you'll have in the freezer.
- It is recommended to install the refrigerator with clearance to the back and sides. This will help reduce power consumption and keep your energy bills lower.
- For the most efficient use of energy, please keep the all inner fittings such as baskets, drawers, shelves on the position supplied by manufacturer.

This appliance is intended to be used in household and similar applications such as

- staff kitchen areas in shops, offices and other working environments;
- farm houses and by clients in hotels, motels and other residential type environments;
- bed and breakfast type environments;
- catering and similar non-retail applications.

Untitled-30 23 7/17/2017 5:03:57 PM

Safety information

Instructions about the WEEE

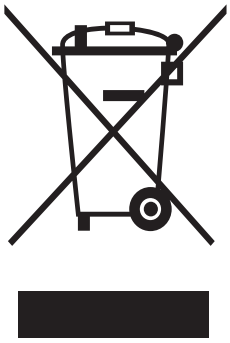

Correct Disposal of This Product (Waste Electrical & Electronic Equipment)

(Applicable in countries with separate collection systems)

This marking on the product, accessories or literature indicates that the product and its electronic accessories (e.g. charger, headset, USB cable) should not be disposed of with other household waste at the end of their working life. To prevent possible harm to the environment or human health from uncontrolled waste disposal, please separate these items from other types of waste and recycle them responsibly to promote the sustainable reuse of material resources.

Household users should contact either the retailer where they purchased this product, or their local government office, for details of where and how they can take these items for environmentally safe recycling.

Business users should contact their supplier and check the terms and conditions of the purchase contract. This product and its electronic accessories should not be mixed with other commercial wastes for disposal.

For information on Samsung's environmental commitments and product specific regulatory obligations e.g. REACH visit: samsung.com/uk/aboutsamsung/samsungelectronics/corporatecitizenship/data_corner.html

(For products sold in European countries only)

Untitled-30 24 7/17/2017 5:03:57 PM

Installation

Follow these instructions carefully to ensure a proper installation of this refrigerator and to prevent accidents before using it.

⚠ **WARNING**

- Use the refrigerator only for its intended purpose as described in this manual.
- Any servicing must be performed by a qualified technician.
- Dispose of the product packaging material in compliance with the local regulations.
- To prevent electric shock, unplug the power cord before servicing or replacements.

Refrigerator at a glance

The actual appearance of your refrigerator may differ, depending on the model and the country.

RS58*

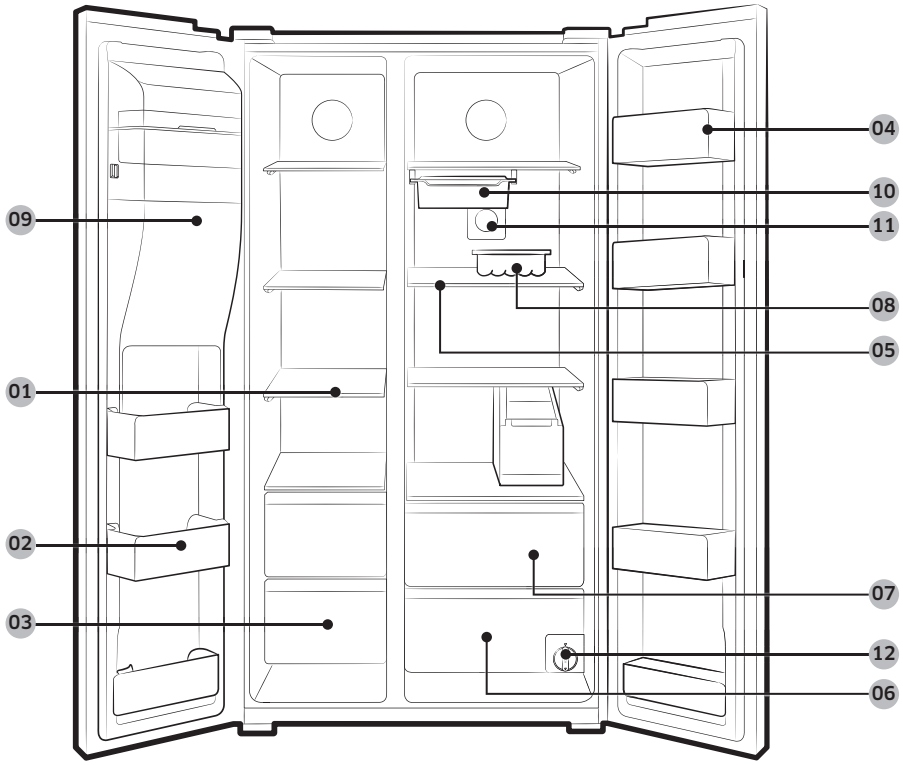

Untitled-30 25
7/17/2017 5:03:58 PM

Installation

RS62*

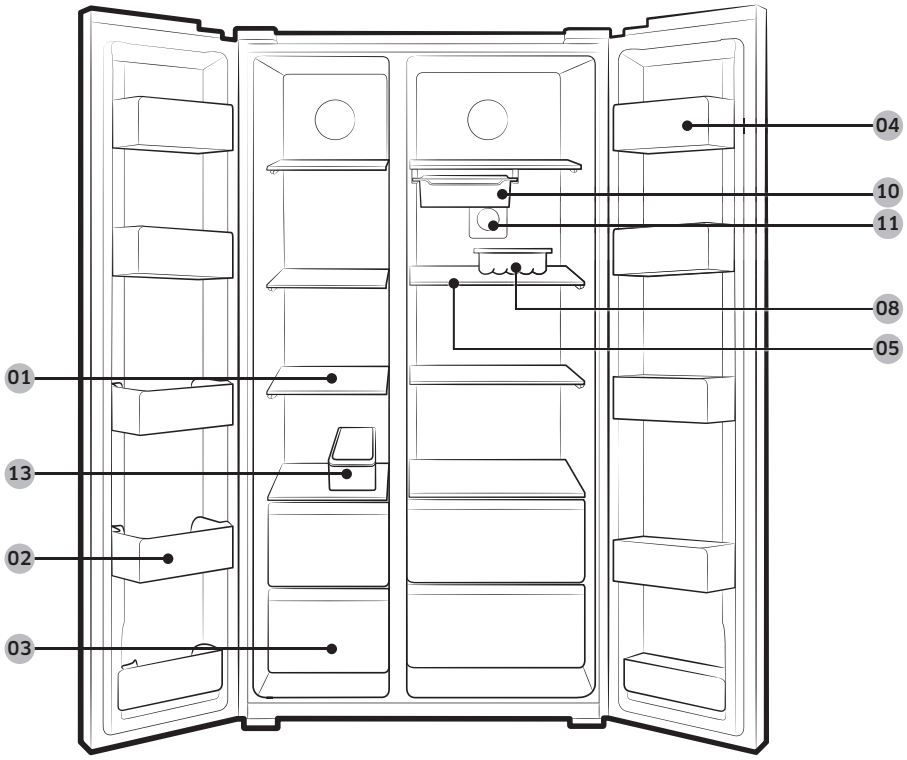

01 Freezer shelves

02 Multipurpose freezer guard

03 Dried food and meat storage bin

04 Refrigerator guard

05 Refrigerator shelves

06 Vegetable bin

07 Multipurpose bin

08 Egg container

09 Ice maker bucket **

10 Moving tray *

11 Anti-bacteria filter *

12 Water filter **

13 Ice tray

* Applicable models only

** Dispenser models only

NOTE

The design of the egg container may differ with the model.

⚠ CAUTION

- Do not put the moving tray in the freezer when filled with water. Water freezes and the moving tray breaks.

Untitled-30 26 7/17/2017 5:03:59 PM

Untitled-30 27 7/17/2017 5:03:59 PM

Installation

Step-by-step installation

STEP 1 Select a site

Site requirements:

- Solid, level surface without carpeting or flooring that may obstruct ventilation
- Away from direct sunlight
- Adequate room for opening and closing the door
- Away from a heat source
- Room for maintenance and servicing
- Temperature range: between 5 °C and 43 °C

Effective temperature range

The refrigerator is designed to operate normally in the temperature range specified by its class rating.

Class	Symbol	Ambient Temperature range (°C)	
		IEC 62552 (ISO 15502)	ISO 8561
Extended Temperate	SN	+10 to +32	+10 to +32
Temperate	N	+16 to +32	+16 to +32
Subtropical	ST	+16 to +38	+18 to +38
Tropical	T	+16 to +43	+18 to +43

NOTE

The cooling performance and power consumption of the refrigerator may be affected by the ambient temperature, the door-opening frequency, and the location of the refrigerator. We recommend adjusting the temperature settings as appropriate.

Untitled-30 28 7/17/2017 5:03:59 PM

Clearance

See the pictures and table below for space requirements for installation.

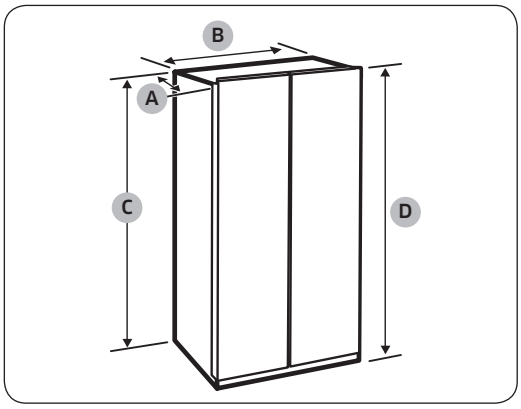

Depth “A”	721
Width “B”	908
Height “C”	1796
Overall Height “D”	1825

(unit: mm)

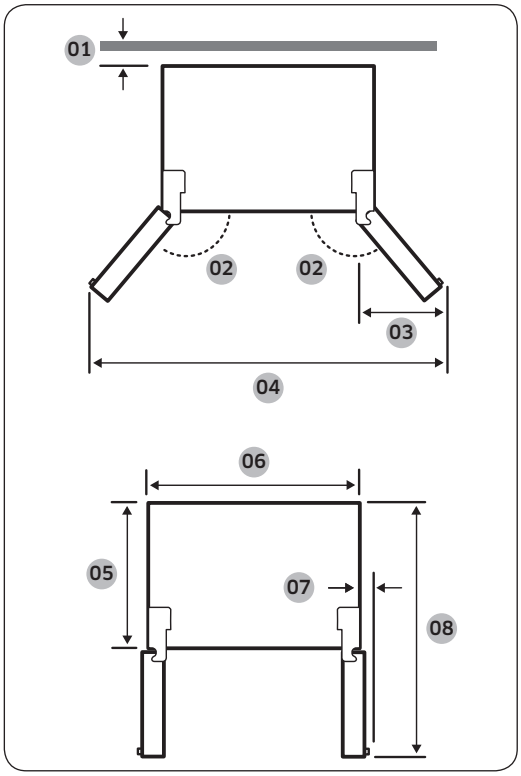

01 50 mm
02 165°
03 519 mm
04 1742 mm
05 610 mm
06 908 mm
07 31 mm
08 1345 mm

NOTE

The measurements in the above table may differ, depending on the measuring method.

Untitled-30 29
7/17/2017 5:03:59 PM

Installation

STEP 2 Flooring

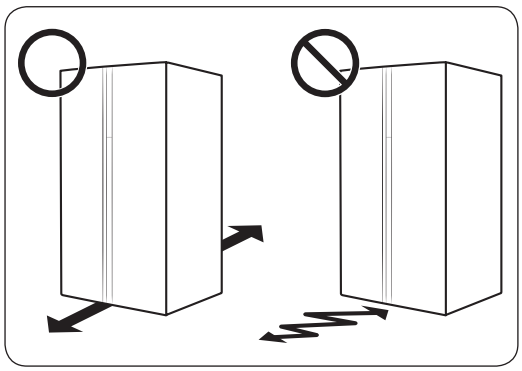

- The surface to install the refrigerator must support a fully loaded refrigerator.
- To protect the floor, put a large piece of cardboard on each leg of the refrigerator.
- Once the refrigerator is in its final position, do not move it unless necessary to protect the floor. If you have to, use a thick paper or cloth such as old carpets along the movement path.

NOTE

If the refrigerator cannot pass through the entrance due to its size, see the Door removal for entrance section in the Maintenance chapter.

Untitled-30 30 7/17/2017 5:03:59 PM

STEP 3 Adjust the levelling feet

⚠ **CAUTION**

- The refrigerator must be levelled on a flat, solid floor. Failing to do so can cause damage to the refrigerator or physical injury.
- Levelling must be performed with an empty refrigerator. Make sure no food items remain inside the refrigerator.
- For safety reasons, adjust the front side a little higher than the rear side.

The refrigerator can be levelled using the front legs that have a special screw (leveller) for levelling purposes. Use a flat-head screwdriver for levelling.

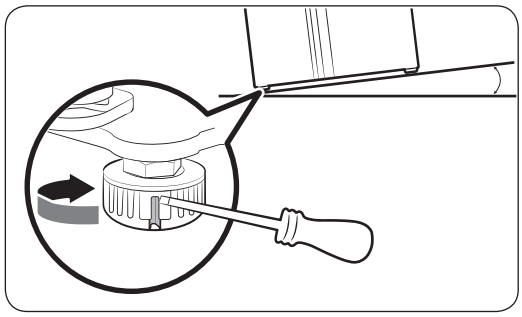

To adjust the height of the freezer side:
Insert a flat-head screwdriver into the leveller of the freezer-side front leg. Turn the leveller clockwise to raise, or turn it counter clockwise to lower.

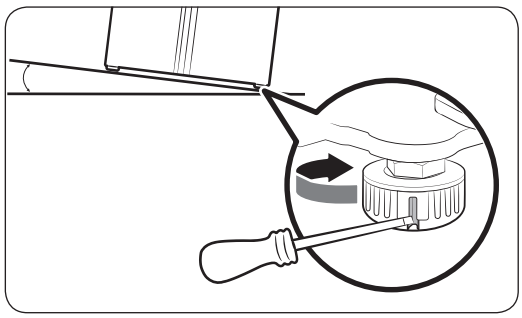

To adjust the height of the fridge side:
Insert a flat-head screwdriver into the leveller of the fridge-side front leg. Turn the leveller clockwise to raise, or turn it counter clockwise to lower.

Untitled-30 31 7/17/2017 5:03:59 PM

Installation

STEP 4 Adjust the door height as well as the door gap

To adjust the height of a door

The height of a door can be adjusted using the clamp nut and the height nut on the front bottom of each door.

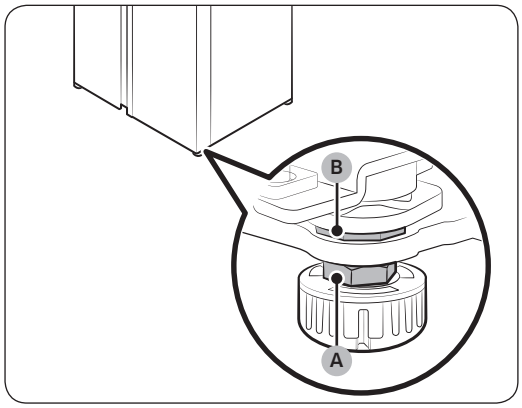

1. Open the door to adjust, and locate the two nuts (A) and (B) on the front bottom of the door.

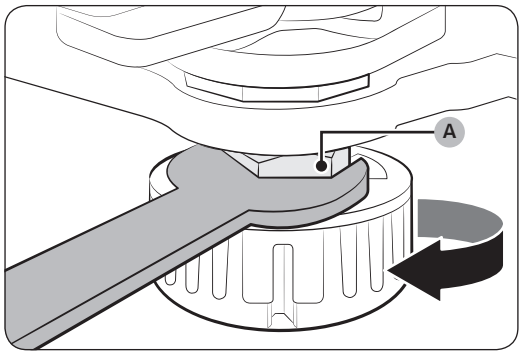

2. With the provided spanner, turn the clamp nut (A) clockwise to loosen. Then, open the door, and do the following inside the door.
   - To raise the door, turn the height nut (B) counter clockwise.
   - To lower the door, turn the height nut (B) clockwise.

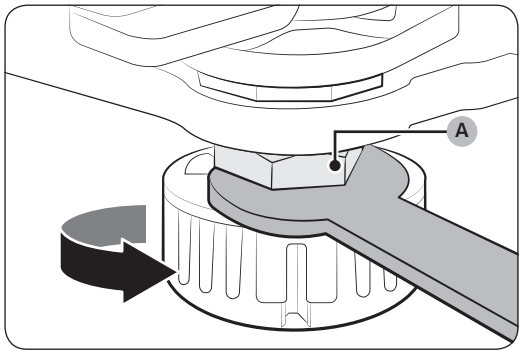

3. When complete, tighten the clamp nut (A) by turning it counter clockwise.

Untitled-30 32 7/17/2017 5:04:00 PM

To correct the gap between a door and the refrigerator unit

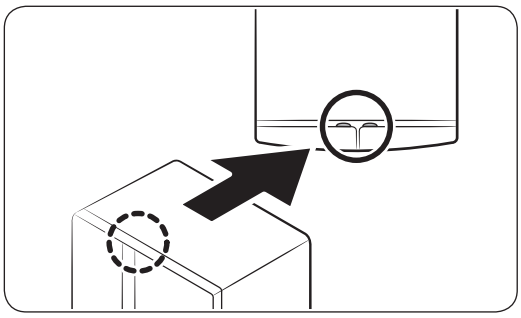

The gap can be adjusted manually using the **gap bolt** on the top rear side of each door.

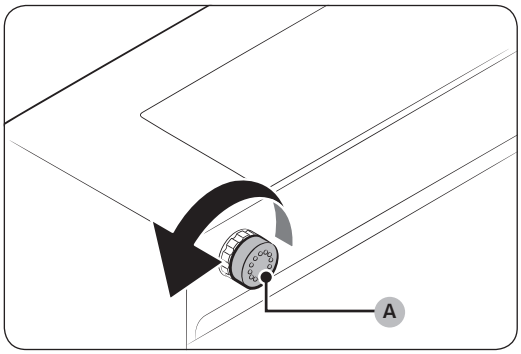

1. To adjust the gap, do the following:
   - To widen the gap, turn the **gap bolt (A)** clockwise.
   - To narrow the gap, turn the **gap bolt (A)** counter clockwise.

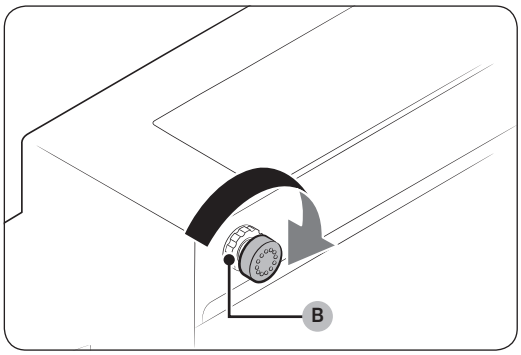

2. When the gap is corrected, tighten the **locking nut (B)** by turning it clockwise.

Untitled-30 33
7/17/2017 5:04:01 PM

Installation

STEP 5 Connect to a water source

⚠ CAUTION

- The water line must be connected by a qualified technician.
- The warranty for your refrigerator does not cover the water line installation. The water line installation will be performed at your own costs unless the installation fee is included in the retailer's price.
- Samsung takes no responsibility for the water line installation. If water leaks occur, contact the installer of the water line.

To connect the cold water pipe to the water filtering hose

⚠ CAUTION

- Make sure the water filtering hose is connected to a cold, potable water source pipe. Connecting to the hot water pipe may cause the purifier to malfunction.

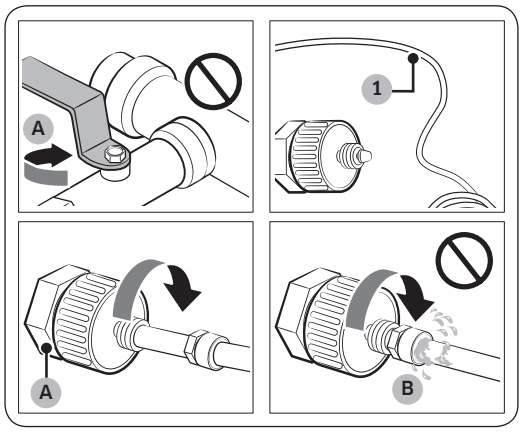

A. Close Main Water pipe

B. No gap

1. Shut off the water supply by closing the main water valve.
2. Locate the cold, potable water pipe (1).
3. Follow the Water Line Installation to connect to the water pipe.
4. When connection is complete, open the main water valve and dispense about 3 liters of water. This is to remove impurities inside the pipe.

Untitled-30 34 7/17/2017 5:04:01 PM

To connect the water filtering hose to the water line

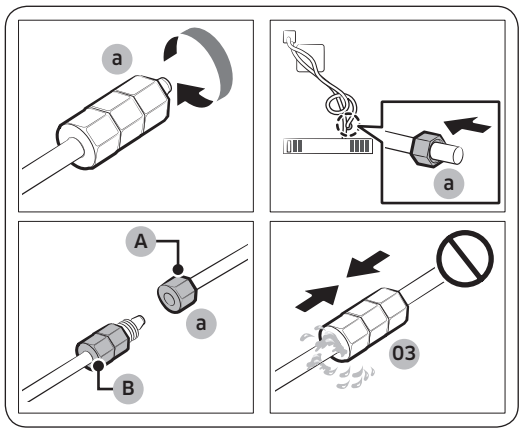

A. Water Line from unit
B. Water Line from Kit

1. Loosen and remove the **compression nut (a)** from the water line of the refrigerator, and insert it to the water filtering hose.
2. Tighten up the **compression nut (a)** to connect the water filtering hose and the water line.
3. Open the main water valve and check for any leaks.
4. If there are no leaks, dispense about a 3 liters of water before actually using the refrigerator to remove impurities inside the water filtering system.

To repair the water line

⚠ **CAUTION**

The waterline must be repaired by a qualified professional. If you encounter a water leak, contact a local Samsung service centre or the installer of the waterline.

STEP 6 Initial settings

By completing the following steps, the refrigerator should be fully functioning.

1. Plug the power cord into the wall socket to turn the refrigerator on.
2. Open the door, and check if the interior light lights up.
3. Set the temperature to the coldest, and wait for about an hour. Then, the freezer will be slightly chilled, and the motor will run smoothly.
4. Wait until the refrigerator reaches the set temperature. Now the refrigerator is ready for use.

STEP 7 Final check

When installation is complete, confirm that:

- The refrigerator is plugged into an electrical outlet and grounded properly.
- The refrigerator is installed on a flat, level surface with a reasonable clearance from the wall or the cabinet.
- The refrigerator is level and is sitting firmly on the floor.
- The door opens and closes freely, and the interior light turns on automatically when you open the door.

Untitled-30 35 7/17/2017 5:04:01 PM

Installation

Door removal for entrance

If the refrigerator cannot pass through the entrance due to its size, follow these instructions:

Tools required (not provided)

These tools are used for removing the doors.

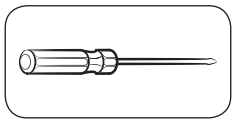

Philips screwdriver

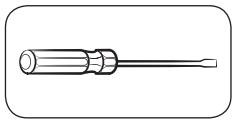

Flat-heat screwdriver

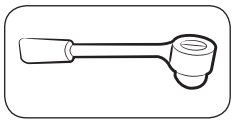

Socket spanner (10 mm)

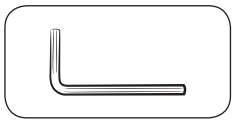

Allen spanner (5 mm)

Disconnect the water line

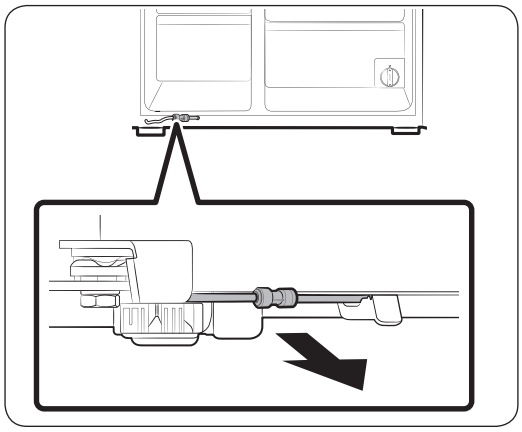

1. From the bottom rear side of the refrigerator, pull out the water line to the front.

NOTE

The refrigerator's water line is a water circulation line that connects between the water pipe from the water source and the hoses from the water filtering system of the refrigerator.

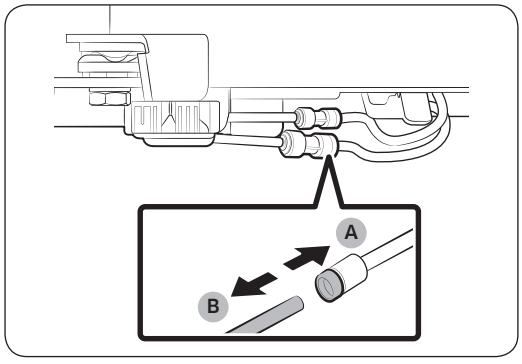

2. To disconnect the hoses, press and hold the **transparent coupler (A)** and detach the **water hose (B)**.

CAUTION

Do not apply excessive force to the coupler. It may break.

Untitled-30 36 7/17/2017 5:04:02 PM

Detach the doors

⚠ CAUTION

The door may fall off or over and damage itself during any of these steps. To prevent an accident, use extreme caution when performing these steps.

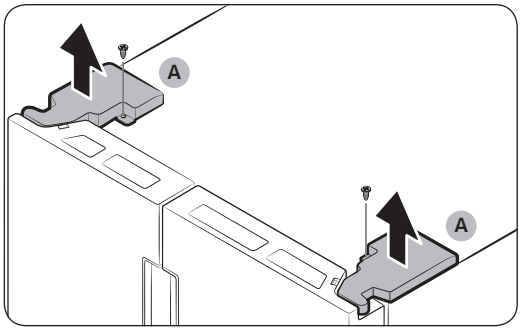

1. Use a Philips screwdriver to unscrew the **hinge covers (A)** on the top of each door.
2. Open the doors to loosen the hinges and remove the hinge covers. Once the covers are removed, close the doors.

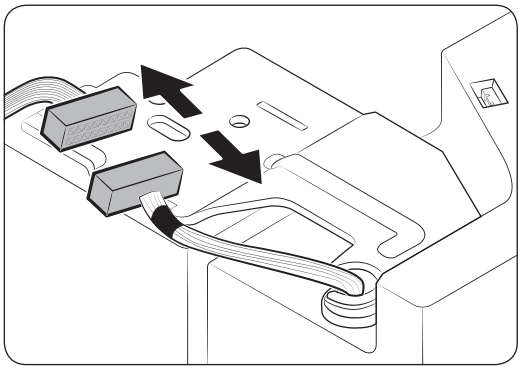

3. Disconnect the electrical harness.

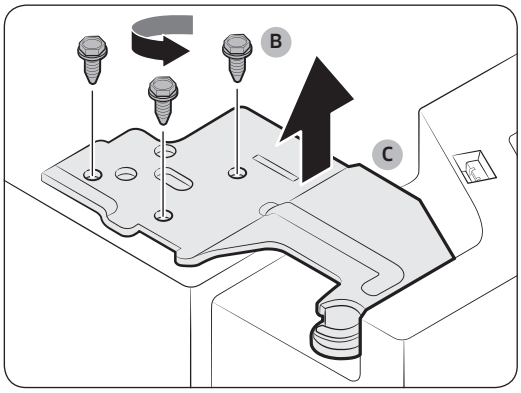

4. Unscrew the **hinge screws (B)** counter clockwise, and remove the **upper hinge (C)**. Be careful as the door can fall on you, causing physical injury.

Untitled-30 37 7/17/2017 5:04:03 PM

Installation

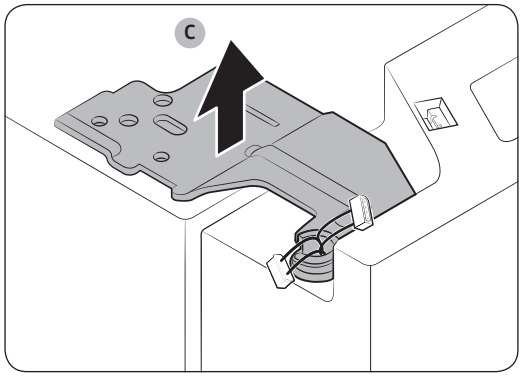

5. Remove the **hinges (C)** on both sides.
6. Gently lift up the doors one by one to remove. Use caution as the door may fall off or over.

Reconnect the water hoses

Once the refrigerator has passed through the entrance, reconnect the water hoses and insert the provided clips (x2) to tighten the coupler.

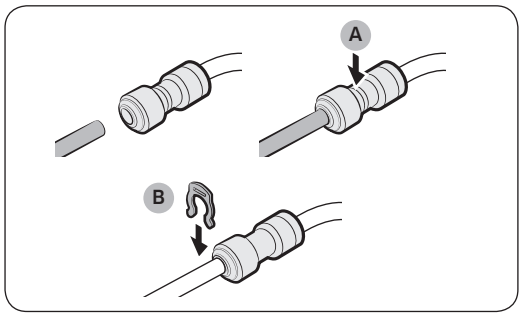

A. Center of transparent coupler
B. Clip A (1/4") (6.35 mm)

⚠ CAUTION

- Make sure the water hoses are connected with matching colours.
- To prevent water leaks, each water hose must be inserted fully to the centre of the transparent coupler and then must be clipped.

Untitled-30 38 7/17/2017 5:04:03 PM

Reattach the doors

⚠ CAUTION

- Before reattaching the doors, make sure all the electrical connectors are properly connected.
- The freezer door must be reattached before the fridge door.



1. Hold the freezer door and hook to the hinge at the bottom of the refrigerator.

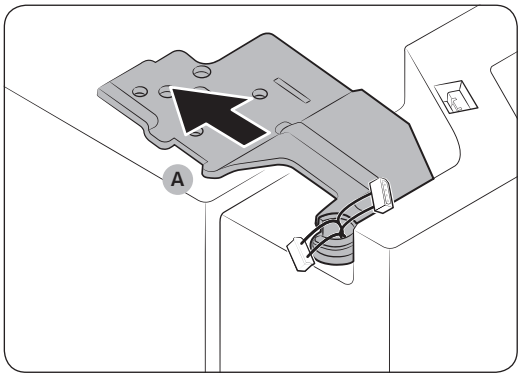

2. On the top side, insert the **hinge (A)** into the hinge slot.

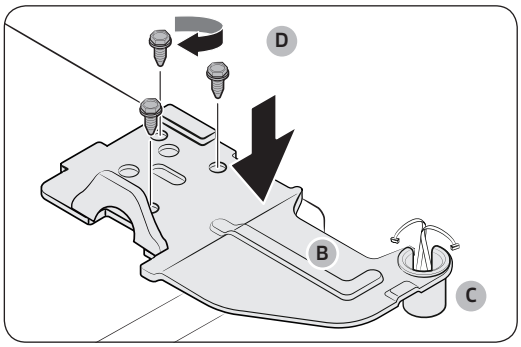

3. Insert the **upper hinge shaft (B)** into the **hinge hole (C)**. Make sure the hinge shaft is straight so that all screw holes are fully revealed. Then, tighten the **hinge screws (D)** clockwise.

Untitled-30 39
7/17/2017 5:04:04 PM

Installation

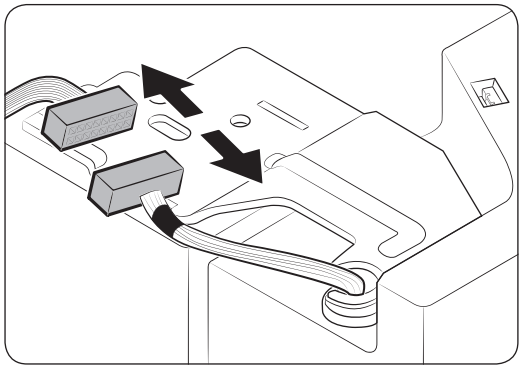

4. Connect the electrical harness.

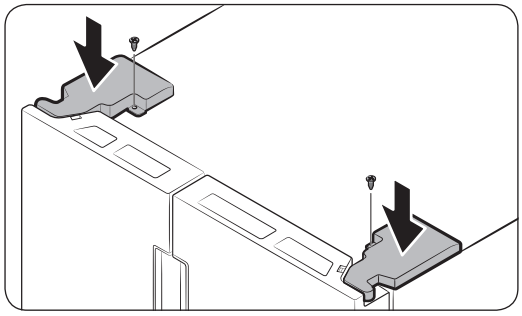

5. Insert the hinge covers with the front sides first, and then tighten the screws. Use a Philips screwdriver for this step.

Untitled-30 40 7/17/2017 5:04:04 PM

Operations

Feature panel

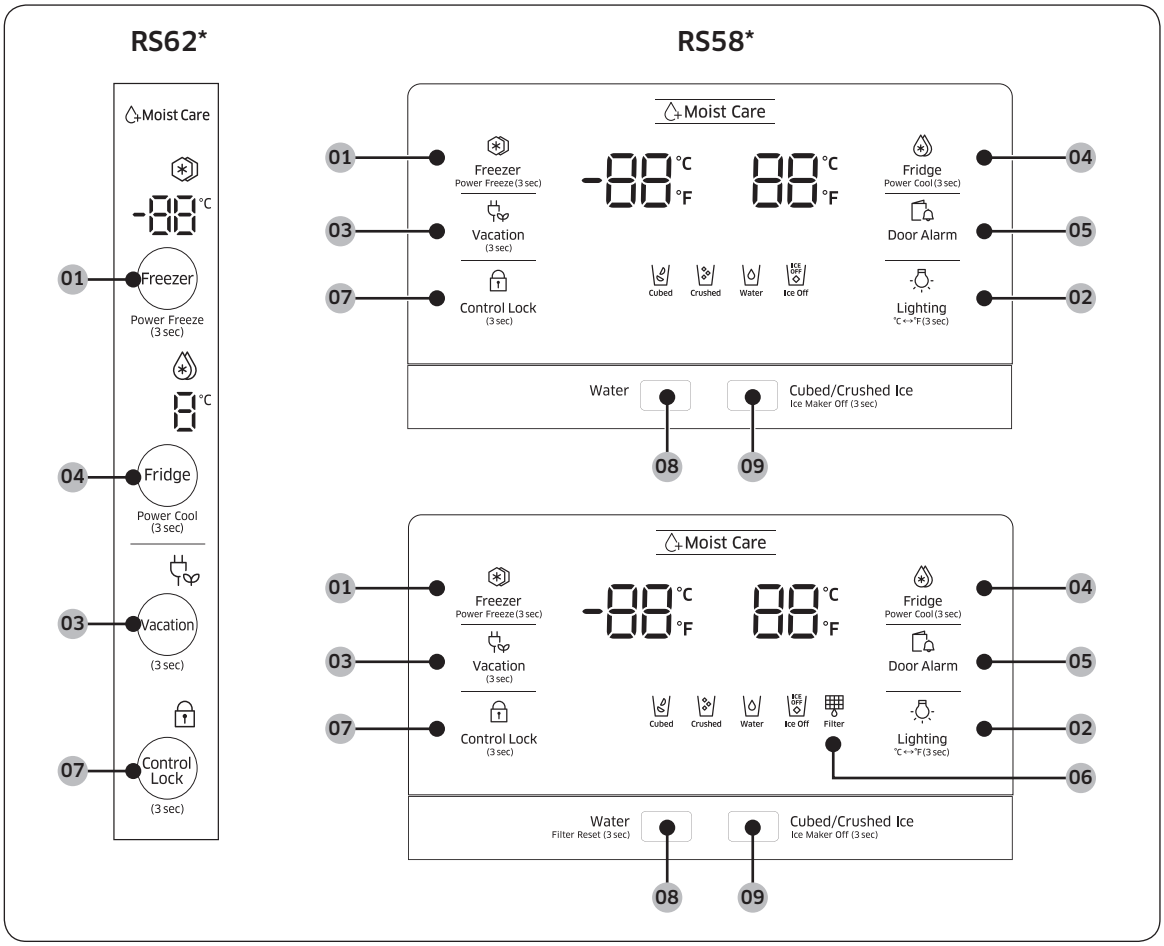

01 Freezer / Power Freezer
02 Lighting / °C ↔°F
03 Vacation
04 Fridge / Power Cool
05 Door Alarm
06 Filter *
07 Control Lock
08 Water / Filter Reset*
09 Cube/Crushed Ice / Ice Maker Off

* Applicable models only

Untitled-30 41
7/17/2017 5:04:04 PM

Operations

01 Freezer / Power Freeze (3 sec)

Freezer	The **Freezer** button can be used to set the freezer temperature, or to activate Power Freeze. Available temperatures are between -15 ˚C (5 ˚F) and -23 ˚C (-8 ˚F).
Power Freeze	Power Freeze speeds up the freezing process at maximum fan speed. The freezer keeps running at full speed for several hours and then returns to the previous temperature. • To activate Power Freeze, press and hold **Freezer** for 3 seconds. The corresponding indicator ( ) lights up, and the refrigerator will speed up the freezing process for you. • To deactivate, press and hold **Freezer** for 3 seconds again. The freezer returns to the previous temperature setting. • To freeze large amounts of food, activate Power Freeze for at least 24 hours before putting food in the freezer. **NOTE** Using Power Freeze increases power consumption. Make sure you turn it off and return to the previous temperature if you do not intend to use it.

02 Lighting / ˚C ↔˚F (3 sec)

The **Lighting** button can be used to switch the temperature scale between Celsius and Fahrenheit. To switch the temperature scale, press and hold **Lighting** for 3 seconds to change the current temperature scale.

03 Vacation

Vacation	The **Vacation** button can be used to activate/deactivate Vacation mode. If you are going on vacation or a business trip, or if you do not intend to use the refrigerator for an extended time, use the Vacation feature. Press and hold **Vacation** for 3 seconds to turn off the fridge operation with the Vacation indicator ( ) on. **NOTE** It is strongly recommended to empty the fridge compartment and make sure the door is closed.

Untitled-30 42 7/17/2017 5:04:04 PM

04 Fridge / Power Cool (3 sec)

The **Fridge** button can be used to set the fridge temperature, or to activate/deactivate Power Cool.

Fridge	You can manually adjust the cooling temperature for the fridge. Keep pressing **Fridge** to cycle through the temperature bar, and select a desired temperature between 1 °C (34 °F) and 7 °C (44 °F).
Power Cool	Power Cool speeds up the cooling process at maximum fan speed. This is useful to quickly cool food that spoils quickly, or after the door is left open for some time. The fridge keeps running at full speed for several hours and then returns to the previous temperature. Press and hold **Power Cool** for 3 seconds.

05 Door Alarm

Door Alarm	You can set the alarm for a reminder. If the door is left open for more than 2 minutes, the alarm will sound with the alarm indicator ( ) blinking. The alarm is enabled by factory default. To disable the alarm, press **Door Alarm**. To enable, press **Door Alarm** again.

06 Filter

The filter lifecycle will be reset and the filter indicator turns off. The icon will blink red for several seconds when you open or close the door.

Untitled-30 43 7/17/2017 5:04:05 PM

Operations

07 Control Lock (3 sec)

Control Lock	To activate the Control Lock, press and hold **Control Lock** for 3 seconds. The controls on the display are disabled, and the dispenser does not operate even if you push the lever. To deactivate, press and hold again for 3 seconds.

08 Water / Filter Reset (3 sec)

The **Water** button can be used to dispense water, or to reset the water filter.

Dispensing	Press **Water** to dispense water. In this mode, no ice will be dispensed.
Filter Reset	After about 6 months (approximately 300 gallons) of using the original water filter, the Filter indicator turns red to remind you that the filter needs to be replaced. If this happens, replace the filter, and press and hold **Filter Reset** for 3 seconds. **NOTE** Some regional areas have relatively large amounts of lime contained in the water. This may reduce the lifecycle of the filter. In these areas, you will have to replace the water filter more often than specified above.

09 Cubed/Crushed Ice / Ice Maker Off (3 sec)

Cubed/Crushed Ice	You can select an ice type. Press the button to toggle between the cubed and crushed ice types. The corresponding indicator turns on.
Ice Maker Off	To disable ice making, press and hold for 3 seconds. In this mode, ice making is disabled even if you press **Cubed/Crushed Ice**.

Untitled-30 44 7/17/2017 5:04:05 PM

Temperature settings

To ensure optimal performance, we recommend setting the temperature to -19 °C (-2 °F) for the freezer, and 3 °C (37 °F) for the fridge.

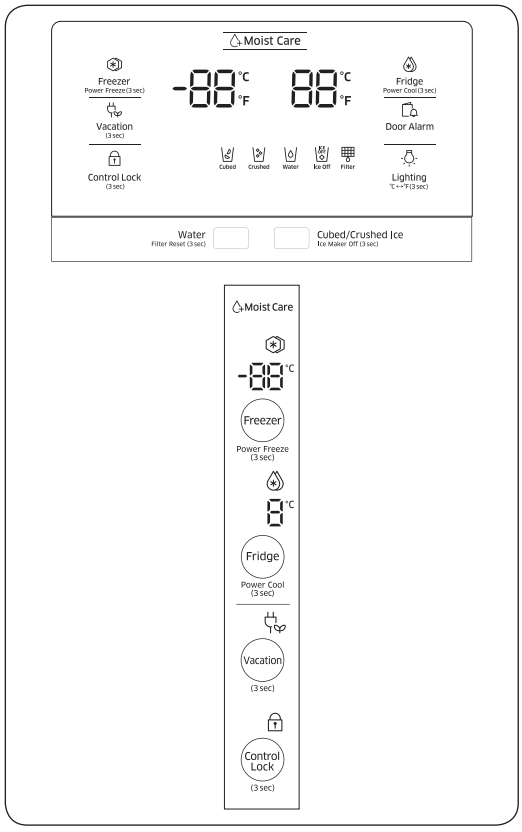

Freezer

The freezer temperature can be adjusted between -23 °C (-9 °F) and -15 °C (5 °F).

To change the temperature, keep pressing **Freezer** until a desired temperature is selected. The temperature changes by 1 scale unit.

- Recommended: -19 °C (-2 °F)

NOTE

Ice cream may melt at -15 °C (5 °F).

Fridge

The fridge temperature can be adjusted between 1 °C (34 °F) and 7 °C (44 °F).

To change the temperature, keep pressing **Fridge** until a desired temperature is selected. The temperature changes by 1 scale unit.

- Recommended: 3 °C (37 °F)

The temperature of the freezer or fridge may rise if you open the door frequently, or a large amount of food is put in the refrigerator. If this happens, the temperature display blinks until the refrigerator returns to the specified temperature settings.

NOTE

If this blinking continues, disconnect the power cord and restart the refrigerator after 10 minutes.

Untitled-30 45 7/17/2017 5:04:05 PM

Operations

Special features

The refrigerator features user-oriented devices that you can use to benefit from.

Water dispenser (applicable models only)

With the water dispenser, you can dispense water without opening the fridge door.

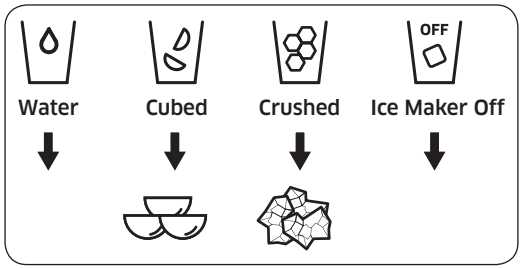

Basically, the water dispenser offers 3 options: chilled water, cubed ice, and crushed ice. If you do not want to dispense ice, press **Ice Maker Off**.

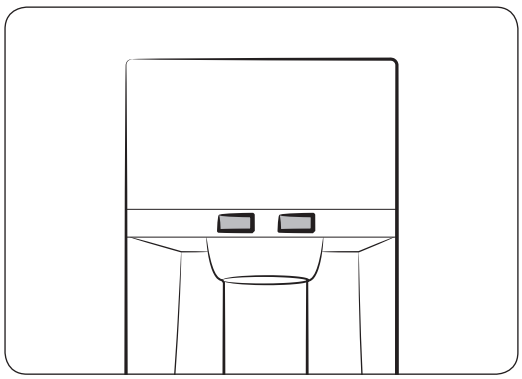

With the Ice Maker enabled,

1. Press to select the ice type.
2. Put a water glass on the dispenser lever and push it. Ice will be dispensed from the dispenser.
3. Press to select the water.
4. Then, put the glass on the dispenser lever and push it. Water will be dispensed from the dispenser.

NOTE

- To prevent spills, wait 2 seconds before removing the glass after dispensing.
- The dispenser will stop dispensing if you keep pushing the dispenser lever for about 1 minute. To dispense more water, release and push the lever again.
- Make sure the glass is in line with the dispenser to prevent the dispensed water from spilling out.
- If you do not use the water dispenser for 2-3 days, the dispensed water may have an abnormal smell or taste. This is not a system failure. Discard the first 1-2 glasses of water.

Untitled-30 46
7/17/2017 5:04:05 PM

To fill the water tank

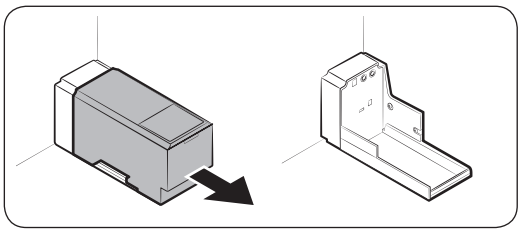

For first-time use, clean the inner side of the water tank and dry well.

1. Hold both handgrips on the front of the tank, and slide out as shown.

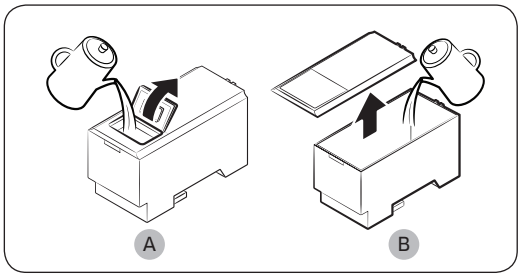

2. Open the **front lid (A)** of the cover or the **entire cover (B)** and fill the tank with a max of 5 liters water.

⚠ CAUTION

Do not exceed the max line. Water overflows.

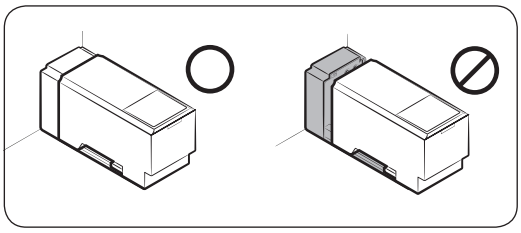

3. Reinsert the water tank and fit into the dispenser mechanism. Make sure the front side (with the front lid) of the tank faces to the front.

⚠ CAUTION

- Make sure the water tank fits into the shelf. Otherwise, the water tank may not operate properly.
- Do not use the refrigerator without inserting the water tank. This may decrease the cooling performance.
- Fill the tank only with potable water such as mineral or purified water. Do not use other liquid.
- Use caution when moving a filled tank. Physical injury may occur if the tank is dropped.
- Do not try to disassemble the internal pump yourself. If the internal pump is damaged or disconnected from the water tank, the dispenser does not operate.

For first-time use

- Push the dispenser lever for 10 seconds to emit air from the hoses of the water supply system.
- Discard the first six glasses of water to remove impurities in the water supply system.

Untitled-30 47 7/17/2017 5:04:06 PM

Operations

To dispense water

Put a glass under the water outlet, and gently push against the dispenser lever with the glass.

⚠ **CAUTION**

- Make sure the glass is in line with the dispenser to prevent the dispensed water from spilling out.
- If you do not use the water dispenser for 2-3 days, the dispensed water may have an abnormal smell or taste. This is not a system failure. Discard the first 1-2 glasses of water.

Ice making (applicable models only)

The refrigerator has a built-in ice maker that automatically dispenses ice so that you can enjoy filtered water with cubed or crushed ice to your preference.

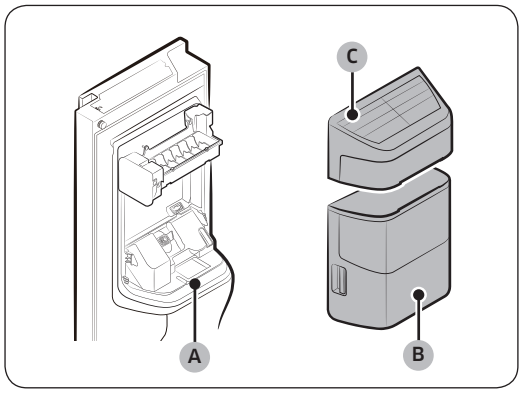

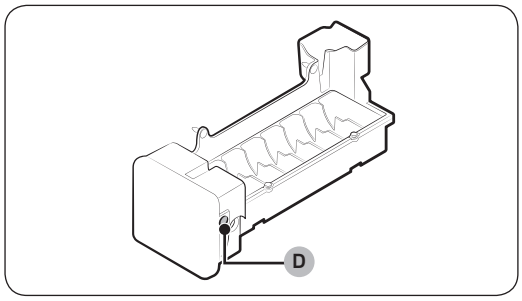

If ice does not dispense, first check the ice maker if it makes ice properly.

To check the ice maker

1. Gently hold the **icemaker bucket (B)** with both hands and remove it from the **ice chute (A)**.
2. Check the icemaker bucket if it contains ice as appropriate.
3. Then, hold the **icemaker cover (C)** and slightly lift up to remove.
4. Press **Test (D)** on the side of the ice maker. You will hear a chime (ding-dong) at the press of the button.
5. You will hear another chime if the ice maker operates properly.

NOTE

If this symptom continues, contact the waterline installer or a local Samsung service centre.

⚠ **CAUTION**

- Do not press the button repeatedly after the ice tray is filled with ice or water. Water may overflow or ice may be jammed.

Untitled-30 48 7/17/2017 5:04:06 PM

- When the refrigerator recovers power supply after a power failure, the icemaker bucket may contain a mix of melted and jammed ice cubes, resulting in a system failure. To prevent this, make sure to empty the icemaker bucket before using the refrigerator.
- To prevent dropping the icemaker bucket, make sure to use both hands when removing or reinserting the icemaker bucket.
- Do not let children hang on or play with the ice dispenser or the icemaker bucket. Children may get hurt.
- Do not put fingers or other objects into the dispenser hole or the ice chute. This may cause physical injury or property damage.

NOTE

- If you remove the icemaker bucket, the Ice Maker Off indicator ( ) will blink.
- Removal of the icemaker bucket does not affect the thermal and mechanical performance of the refrigerator.
- The declared freezer volume is based on use of the freezer guide after the ice maker, snack bin, and upper drawer are removed.

Untitled-30 49 7/17/2017 5:04:07 PM

Operations

To secure more storage space (applicable models only)

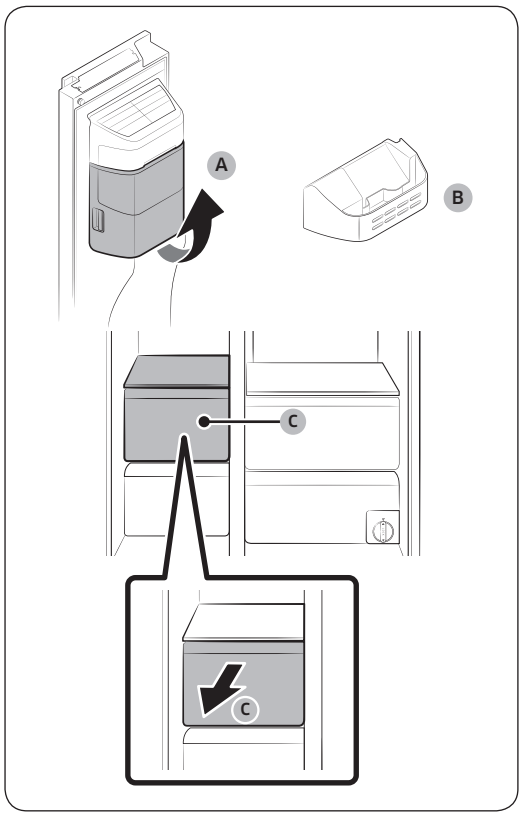

If you do not use the ice maker and need more storage space, remove the **icemaker bucket (A)** and the snack bin. Then, insert the **freezer guide (B)** into the icemaker bucket's place. To secure more room, remove the freezer's **upper drawer (C)**.

Icemaker bucket

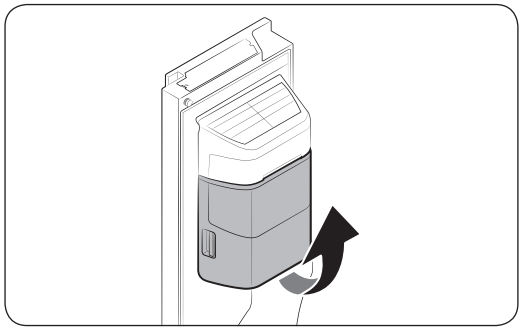

If you do not dispense ice for an extended period, ice may form clumps inside the bucket. If this happens, remove and empty the icemaker bucket.

1. To remove the icemaker bucket, gently lift it up and pull out slowly while holding the handgrips with both hands.
2. Remove and empty the icemaker bucket.

Untitled-30 50 7/17/2017 5:04:07 PM

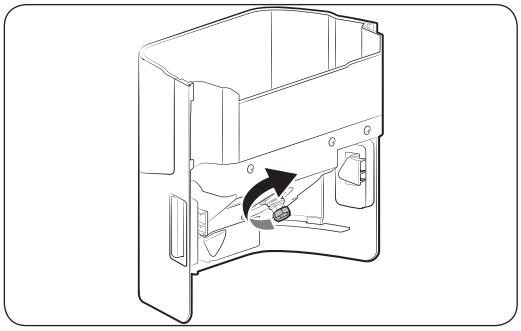

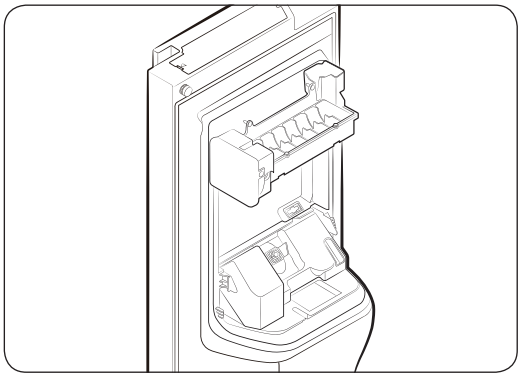

3. When done, turn the gear handle on the rear of the bucket by 90°, and then put the bucket back into position. Make sure the bucket is inserted properly until you hear a clicking sound.
4. Press and hold **Ice Maker Off** for 3 seconds to reset the icemaker.

⚠ CAUTION

- Do not apply excessive force to the bucket cover. The cover may break.
- Do not close the door hard. Water may spill over the ice maker.
- To prevent injury, make sure to clean up any ice or water that has fallen on the floor.
- To prevent accidents or injury, do not let children play with the water dispenser or the ice maker.
- Do not put your hand or an object into the ice chute. This may cause physical injury or product damage.

NOTE

- If the Ice Maker Off indicator ( ) blinks, remove and reinsert the icemaker bucket. Make sure it is reinserted properly.
- Any sound from the ice maker is normal, which outputs during the ice making process.
- While the door is open, neither the ice maker nor the water dispenser operates.

Water pressure

If you want to check how much water flows into the ice tray, follow these steps.

Untitled-30 51 7/17/2017 5:04:07 PM

Operations

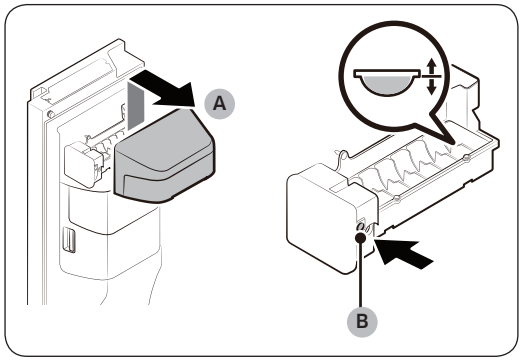

1. Gently lift up the **icemaker cover (A)** to remove.
2. Press **Test (B)** on the side of the icemaker. Normally, the ice cube container fills with water in a few minutes.
3. If the water level is lower than expected, check the water pressure of the water supply line from the water source. This is not a system failure.

⚠ CAUTION

- Do not press **Test** repeatedly when the tray is filled with water. Water may overflow or ice may be jammed.
- Make sure the icemaker bucket is inserted properly. Otherwise, the ice maker will not operate.

Smart Eco (applicable models only)

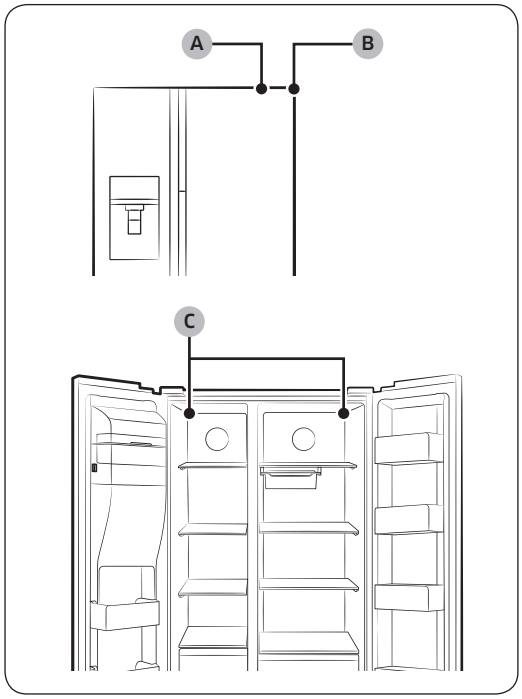

The Smart Eco system intelligently controls the refrigerator according to the operating environment in order to keep food fresh using 4 sensors that are located on both the inner and outer sides of the refrigerator. This smart system also monitors usage patterns and the operating status to save power consumption.

A. External temperature sensor
B. External humidity sensor
C. Internal temperature sensors

Untitled-30 52 7/17/2017 5:04:08 PM

Maintenance

Handle and care

Shelves (fridge/freezer)

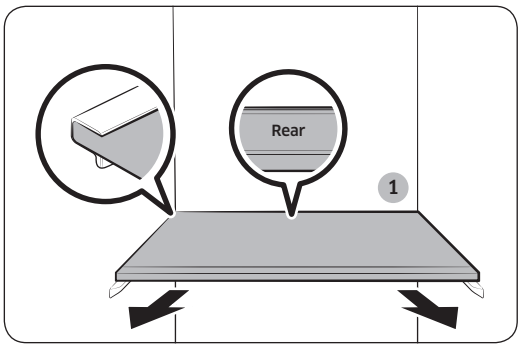

- To remove a shelf, fully open the corresponding door. Hold the front of the shelf and gently lift up and slide out.
- If the door cannot fully open, slide out the shelf half way to the front and turn it over to remove.

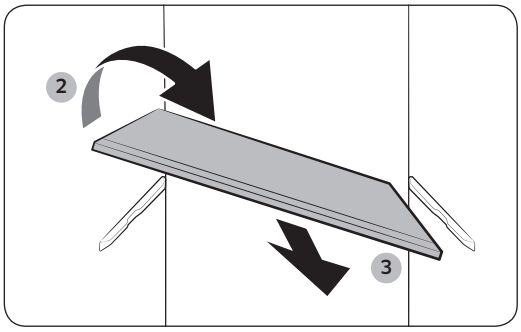

⚠ CAUTION

- The shelf must be inserted correctly. Do not insert upside down.
- Glass containers may scratch the surface of glass shelves.

Moving tray shelf (fridge/freezer)

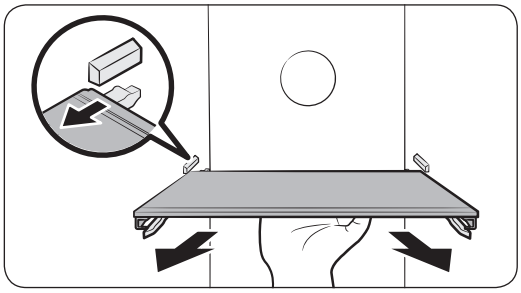

- To remove the shelf, hold the bottom side of the shelf and gently lift up and pull out.

NOTE

Do not hold the front side of the shelf to pull out. The shelf does not loosen on the front side.

Untitled-30 53
7/17/2017 5:04:08 PM

Maintenance

Door guard

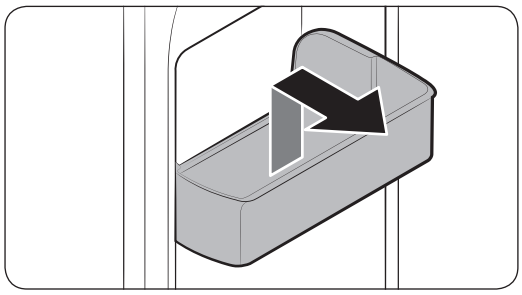

To remove a door guard, hold the front sides of the bin and gently lift up to remove.

Drawers

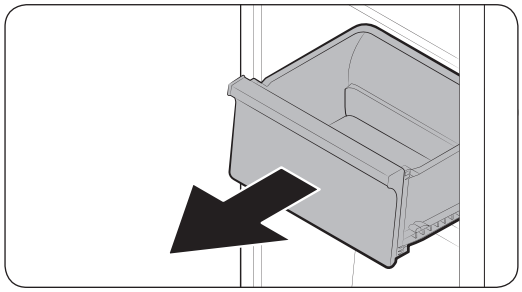

Gently lift up the front of the drawer and slide out.

Untitled-30 54 7/17/2017 5:04:09 PM

Vegetable bin / Dry bins

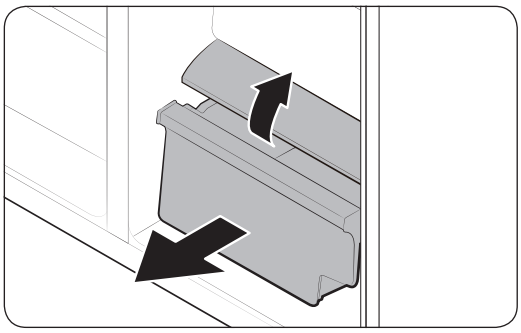

To remove the vegetable bin from the fridge or the dry bin from the freezer.

1. First, remove surrounding multipurpose bins if necessary.

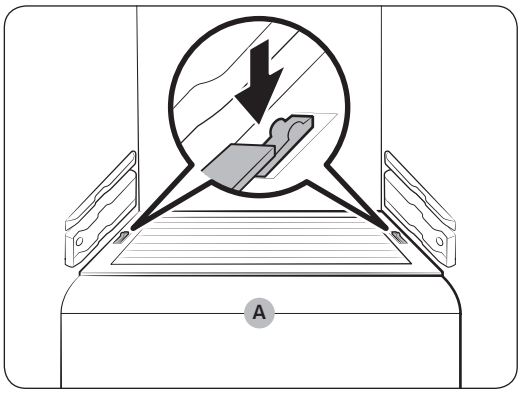

2. If your refrigerator is provided with a cover (A) for the vegetable/dry bin, remove the cover. For this, slide out the cover while holding down the clips on either side of the cover.
3. Gently pull out the vegetable/dry bin.

Untitled-30 55 7/17/2017 5:04:09 PM

Maintenance

Sealing guard (applicable models only)

To remove the sealing guard

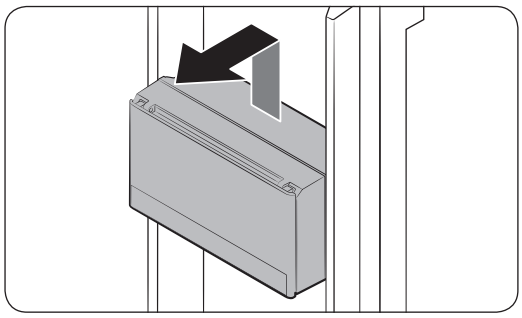

Gently lift up the guard, and then pull it to the front while holding the bottom side.

To reinsert the sealing guard

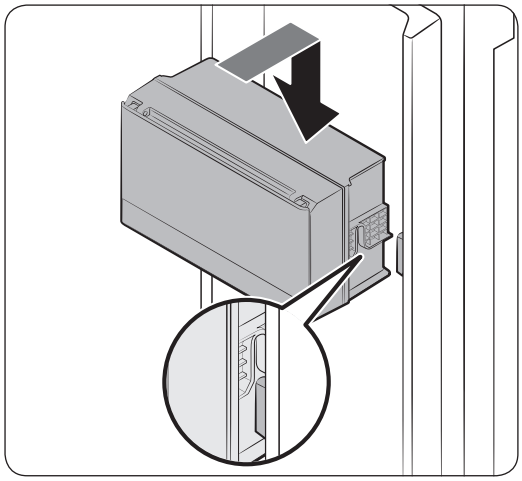

1. Put the guard on the front of the housing. And then, insert the guard by lowering it.

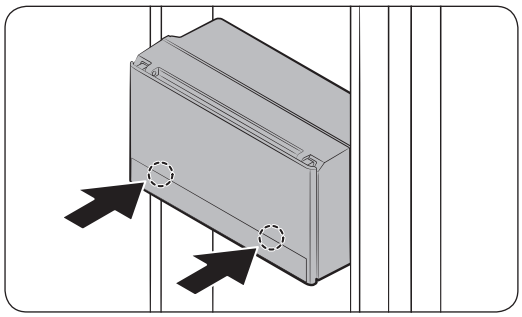

2. Press both hooks on the guard to lock the guard. When the guard is locked properly, you will hear a clicking sound.

⚠ CAUTION

- Make sure the sealing guard is locked firmly. Otherwise, the guard may cause noise when you open or close the door.

Untitled-30 56 7/17/2017 5:04:10 PM

Icemaker bucket

To remove the icemaker bucket, see the Diagnosis section on page 50.

Cleaning

Interior and exterior

⚠ WARNING

- Do not use benzene, thinner, or home/car detergent such as Clorox™ for cleaning purposes. They may damage the surface of the refrigerator and cause a fire.
- Do not spray water onto the refrigerator. This may cause electric shock.
- Do not put fingers or other objects into the dispenser hole.

Regularly use a dry cloth to remove all foreign substances such as dust or water from the power plug terminals and contact points.

1. Unplug the power cord.
2. Use a moistened, soft, lint-free cloth or paper towel to clean the refrigerator's interior and exterior.
3. When done, use a dry cloth or paper towel to dry well.
4. Plug in the power cord.

Untitled-30 57 7/17/2017 5:04:10 PM

Maintenance

Replacement

Water filter (applicable models only)

⚠ WARNING

- Do not use third-party water filters. Use only Samsung-provided or -approved filters.
- Unapproved filters may leak and damage the refrigerator, causing electric shock. Samsung holds no responsibility for any damage that may occur from use of third-party water filters.

The filter indicator ( ) turns red as a reminder that lets you know it is time to replace the water filter.

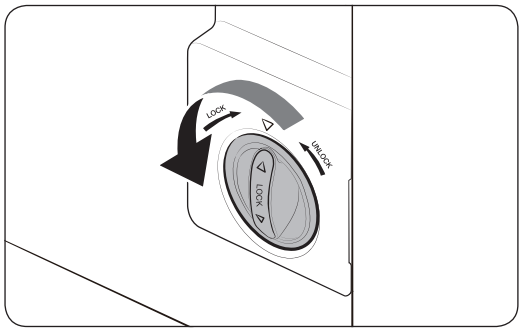

1. Turn the knob of the filter cartridge counter clockwise by 90 degrees. The filter cartridge will be unlocked.

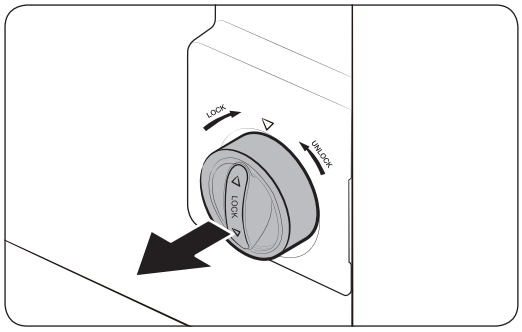

2. Pull out the cartridge.

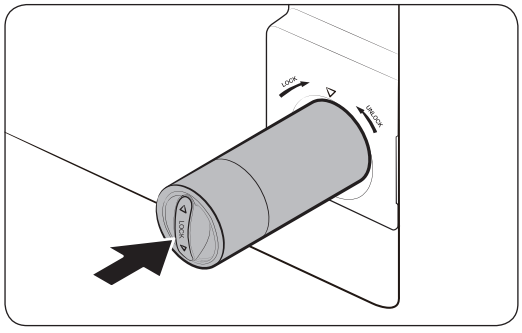

3. Insert a new filter cartridge. Use only Samsung-provided or -approved filters.

Untitled-30 58 7/17/2017 5:04:10 PM

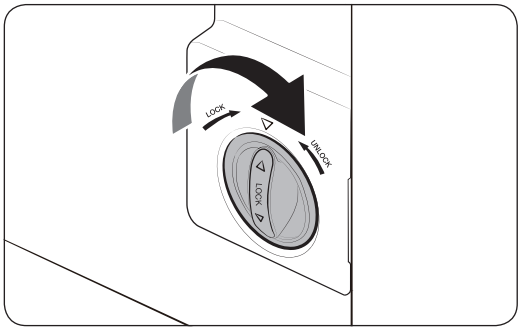

4. Turn the cartridge knob clockwise to lock into place.
5. Press and hold **Filter Reset** on the feature panel for 3 seconds to reset the filter lifecycle. The filter indicator ( ) turns off.
6. When replacing is complete, flush 4 liters of water to remove impurities from the water line. See the Flushing section for more information.

NOTE

- A newly installed filter may cause the water dispenser to spurt water briefly. This is because air has entered the waterline.
- This replacement process may involve the refrigerator to drip water onto the floor. If this happens, wipe up with dry cloths.

Reverse osmosis water filtration system

The water pressure of the water supply system to a reverse osmosis water filtration system must be between 35 psi and 120 psi (241 kPa and 827 kPa).

The water pressure of the reverse osmosis water filtration system to the refrigerator's cold water line must be at least 40 psi (276 kPa). If the water pressure is below the specified:

- Check to see whether the sediment filter in the reverse osmosis system is blocked. Replace the filter if necessary.
- Refill the water tank in the reverse osmosis system with water.
- If your refrigerator has a water filter, it may further reduce the water pressure when used in conjunction with a reverse osmosis system. Remove the water filter.

For more information or servicing, contact a licensed plumbing professional.

Ordering a new filter

To purchase a new water filter, contact a local Samsung service centre.

Lamps and anti-bacteria filter

Neither lamps nor the anti-bacteria filter are user-serviceable. Do not attempt to replace them yourself. To replace them, contact a local Samsung service centre.

Untitled-30 59 7/17/2017 5:04:10 PM

Troubleshooting

If you encounter an abnormal situation with the refrigerator, first check the table below and try the suggestions.

General

Symptom	Action
Does not operate or cool.	• Make sure the power cord is connected properly. • Make sure the temperature control is set correctly. Try setting to a lower temperature. • Make sure to keep the refrigerator away from direct sunlight or a heat source. Failing to do so may affect the cooling performance. • Make sure the refrigerator has enough room from the rear and side walls or the cabinet. Failing to do so may affect the cooling performance. • Too much food may block the ventilation of the refrigerator. To keep the refrigerator in normal operation, do not put too much food inside.
Food in the fridge freezes.	• Check if the temperature control is set to the lowest temperature. If so, change to a higher or the optimal temperature. • This happens if the ambient temperature is too low. Set the temperature higher. • Check if food containing a high portion of water is put in the coldest area of the fridge or near the cooling vent. If this happens, move the food to other shelves in the fridge.
Emits noises.	• Make sure the refrigerator is installed on a stable, flat surface. • Make sure the refrigerator has enough room from the rear and side walls or the cabinet. • Make sure to keep the refrigerator from impurities or foreign objects inside or underneath. • The refrigerator may produce a ticking sound from inside, which occurs when the various accessories contract or expand. This is not a system failure.

Untitled-30 60 7/17/2017 5:04:11 PM

Symptom	Action
The front corners and sides become warm and form condensation.	• To prevent condensation from forming, the refrigerator has heat-proof piping in the front corners. If the ambient temperature rises, this equipment may not work effectively. This is not a system failure. • Make sure the door is closed properly. Condensation may form if you leave the door open for some time. • Condensation may form on the exterior surface of the refrigerator if humid air comes into contact with the cool surface of the refrigerator.
The ice maker does not make ice.	• You must wait for 12 hours until the refrigerator makes ice. • Make sure the ice maker is not stopped while making ice. • Make sure the water tank is filled with water. • Check if the icemaker bucket contains ice clumps. In this case, empty the icemaker bucket and try again.
The water dispenser is not functioning.	• Check if the water tank is frozen. If so, select a higher fridge temperature. • Make sure the water tank is filled with water. • Make sure the water tank is installed properly. • Make sure the water filter is installed properly.
Produces a bubbling sound.	• The refrigerator makes this sound during the cooling process, which is normal.
A bad smell comes from inside the refrigerator.	• Check for any spoiled food. We recommend cleaning the refrigerator on a regular basis and remove any spoiled or suspect food items. • Make sure strong smelling food is wrapped up airtight.
Frost forms on the interior walls.	• Make sure no food blocks the vents of the refrigerator. It is also important to arrange food items evenly for ventilation. • Make sure the door is closed properly.
Condensation forms on the interior walls or around vegetables.	• This happens when food containing a high portion of water is stored uncovered, or the door has been left open for a while. • Make sure food is covered or put in sealed containers.

Untitled-30 61 7/17/2017 5:04:11 PM

Troubleshooting

Symptom	Action
Ice maker does not supply Ice cubes.	Check the following: • Push the water dispenser lever to check the water supply. • Push the ice dispenser lever to check the operation of the auger motor in the ice maker assembly. • Check if there are any objects that obstruct the auger motor from running. If found, remove the objects and clear the motor area. • If the ice maker has not been used for an extended time, the icemaker bucket may contain ice chunk that obstructs the auger motor from running properly. In this case, remove and empty the icemaker bucket, and try dispensing ice.

Untitled-30 62 7/17/2017 5:04:11 PM

Memo

SAMSUNG

Contact SAMSUNG WORLD WIDE

If you have any questions or comments relating to Samsung products, please contact the SAMSUNG customer care center.

Country	Contact Center	Web Site
NEW ZEALAND	0800 726 786	www.samsung.com/nz/support
INDIA	1800 40 SAMSUNG (1800 40 7267864) (Toll-Free)	www.samsung.com/in/support
MALAYSIA	1800-88-9999 603-77137477 (Overseas contact)	www.samsung.com/my/support
PHILIPPINES	1-800-10-726-7864 [PLDT Toll Free] 1-800-8-726-7864 [Globe Landline and Mobile] 02-422-2111 [Standard Landline]	www.samsung.com/ph/support
SINGAPORE	1800-SAMSUNG (726-7864)	www.samsung.com/sg/support
PANAMA	800-0101	www.samsung.com/latin/support (Spanish) www.samsung.com/latin_en/support (English)
SOUTH AFRICA	0860 SAMSUNG (726 7864)	www.samsung.com/support
UK	0330 SAMSUNG (7267864)	www.samsung.com/uk/support
IRELAND (EIRE)	0818 717100	www.samsung.com/ie/support
MYANMAR	+95-1-2399-888	www.samsung.com/th/support
SRI LANKA	0117540540 0115900000	www.samsung.com/support





DA68-03412J-04

Untitled-30 64

7/17/2017 5:04:11 PM