Contents

EN

1. *General safety instructions* 2
2. *Installation* 9
3. *Description of the controls* 20
4. *Operating instructions* 32
5. *Cleaning and maintenance* 53
6. *Troubleshooting. What to do if...* 56
7. *Troubleshooting* 61

Thank you for choosing one of our products.
You are advised to read this manual carefully; it contains all the information you need about the right conditions for the proper, safe use of your dishwasher.
The individual sections are laid out to provide you with a step-by-step guide to all your appliance's functions; the texts are easy to understand and are complete with detailed illustrations.
Recommendations are given for the correct use of the baskets, spray arms, containers, filters, washing programs, and for operating the controls.
Following the cleaning instructions provided here will keep your dishwasher's performance at peak levels in the long term.
This user-friendly manual will provide answers to all your questions about use of the dishwasher.



*INSTALLATION INSTRUCTIONS: these are intended for the **qualified technician** who must carry out the installation, hook-up and testing of the appliance.*



USER INSTRUCTIONS: these consist of recommendations for using the appliance, a description of its controls and of the correct cleaning and maintenance procedures.



This manual includes options, programs and features that may be present on the type of dishwasher you have purchased. For the specific characteristics of your model, please refer to the manual supplied together with the product.

TRANSLATION OF THE ORIGINAL INSTRUCTIONS

1. General safety instructions

- This manual is an integral part of the appliance; it must always be kept intact together with the dishwasher for future reference (even if sold). Before using the appliance, carefully read all the instructions contained in this manual**.**
- This appliance is intended for indoor use in a household environment and similar such as staff kitchens of shops, offices and other workplaces, institutions, and for the use by guests at hotels, hostels, bed and breakfast and other residential facilities. The appliance is designed and manufactured to perform the following function: **washing and drying of dishes**; any other use shall be considered improper. **The manufacturer declines all responsibility for uses other than those described above**.
- Do not use appliances which have been damaged during transit! If in doubt, contact your dealer.
- The appliance must be installed and connected in accordance with the instructions provided by the manufacturer. **Installation must be performed by qualified technicians in accordance with applicable regulations.**

- Never leave waste packaging unattended. Do not allow children to play with packaging materials. Separate waste packaging materials by type and consign them to the nearest recycling centre.
- The plate with the technical data, serial number and marking is in a visible position on the inside edge of the door. I**t must not be removed.**
- The appliance must be earthed in compliance with electrical safety regulations. **The manufacturer declines all responsibility for damage to persons or property resulting from failure to earth the appliance or from a defective earth connection.**
- During the installation the appliance must be disconnected from the network.
- Do not install the appliance in a place subject to freezing.
- Do not install the appliance near equipment with high irradiation temperature (e.g. gas burners, fireplaces, etc.).
- If the appliance is installed in a compartment above or below another equipment (e.g. gas burners, ovens, etc.), read carefully the instructions provided by the manufacturer of the equipment. If the instructions of the equipment do not contain information, contact the manufacturer of the equipment to ensure that the appliance can be installed above or below it.

- Building-in the appliance underneath a hob is absolutely forbidden. Installing a hob on top of free-standing appliance is absolutely forbidden.
- To ensure stability, install the appliance only under continuous worktop, securely fixed to adjacent cabinets. If the appliance is installed in a high cabinet, both the appliance and the cabinet must be adequately fixed.
- If the appliance is not built-in and is therefore accessible on one side, the door hinge area must be covered for safety reason (injury hazard). The covering fixtures are available as an accessory from specialist dealers or the after-sales.
- Check that the voltage and the frequency of the mains match the ratings on the name plate of the appliance.
- The plug on the supply cord and the corresponding socket outlet must be of the same type and meet the regulations in force. Do not use adaptors or shunt connections in order to avoid the possibility of overheating or burning.
- The plug of the appliance must be accessible after installation. Never disconnect the plug by pulling on the power supply lead.
- If the appliance is provided with a plugless supply cord, an omnipolar circuit breaker providing a full disconnection in overvoltage protection class III must be installed in an easily accessible position on the supply line.

- The appliance **must** be connected to the water supply by means of new hoses.
- Briefly test the appliance after installation. Run a wash cycle with a temperature of between 45 and 70°C with the dishwasher empty and using a specific dishwasher detergent. (It is not sufficient to run a soak cycle). If the dishwasher fails to operate correctly, disconnect it from the electrical power supply and call the nearest technical service centre. **Never attempt to repair the appliance yourself.**
- The dishwasher should only be used by adults. Use by children aged from eight years and persons with reduced physical, sensor or mental capabilities or lack of experience and knowledge is only permitted under the supervision of a person responsible for their safety.
- Do not allow children to play with the appliance.
- Keep children away from the dishwasher when the door is open. Always check that the detergent distributor is empty after completion of the wash cycle.
- Cleaning and regular maintenance of the appliance by children is only permitted under the supervision of a person responsible for their safety.
- Some detergents are strongly alkaline. Avoid contact with the skin and eyes. Detergents can be extremely dangerous if swallowed. They contain substances capable of causing permanent damage to the mouth and throat, and even leading to

suffocation. Observe all the safety instructions on the packaging of these products.

- Do not drink the water residues which may be present on the dishes or appliance at the end of the washing program.
- Never place solvents such as alcohol or turpentine, which are potentially explosive, inside the appliance. Never load dishes soiled with ash, wax or paint.
- Never leave the dishwasher door open; people might trip over it. Leaning or sitting on the dishwasher door when open may cause the appliance to overturn and/or damage it.
- Switch off the dishwasher after use to avoid wasting electricity.
- Knives and other kitchen equipment with sharp edges must be placed in the basket with their tips downwards, or horizontally in the top basket; take care not to injure yourself on any sharp edges protruding from the baskets.
- The appliance satisfies all applicable safety regulations governing electrical equipment. Any technical checks should be conducted exclusively by trained and authorised technicians: **repairs performed by unauthorised persons not only void the warranty but may also put the user's safety at risk.**
- In the event of a fault, disconnect the dishwasher from the electrical power supply and shut off the

water tap. In the event of damage to the supply cord, have it replaced by the manufacturer or an authorised technical service centre.

- Some components are live even with the **on/off** button in the off position. Before performing any maintenance work on the appliance, disconnect it from the electrical power supply.
- Do not clean the machine with a water jet machine, high-pressure or steam cleaners.
- **Models with “acquastop” device**
  This device prevents flooding in case of water leak. When the “acquastop” device is tripped, contact a qualified technician to identify and repair the fault.
  In these models the water intake hose contains a solenoid valve. **Do not cut the hose and do not allow the solenoid valve to drop into water.** In case of damage to the water intake hose, disconnect the appliance from the electrical and water supply.
  Warning: The device only works if the dishwasher is connected to the mains.

1.1 Declaration of conformity

The appliance complies with the essential requirements of the following European directives:

- 2009/125/EC
- 2011/65/EU
- 2014/35/EU
- IEC/EN 62471, risk group 1, for models with internal lighting.
- IEC/EN 61770

1.2 Disposal



This appliance must be disposed of separately from other waste (directive 2012/19/EC).

The appliance does not contain substances in quantities sufficient to be considered hazardous to health and the environment, in accordance with current European directives:

To dispose of the appliance:

- Cut the power cable,
- make the lock unusable.

The manufacturer declines any liability for damage or injury caused by failure to comply with the instructions indicated above or as a result of tampering with even just one part of the appliance, and the use of non-original spare parts.

2. Installation

2.1 Technical characteristics

Water supply pressure	min. 0.05 - max. 0.9 MPa (min. 0.5 – max. 9 bar)
Water supply temperature	max. 60°C
Capacity	12-13 standard place settings
Class of protection against moisture	IPX0
Protection against electric shock	class I
Electrical data	see the data plate

Appliance dimensions (mm)

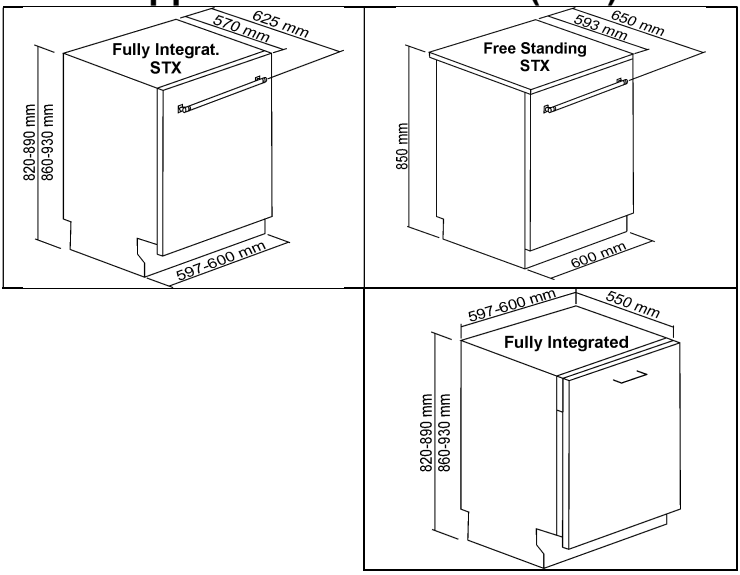

2.2 General information

- Remove the polystyrene basket retainers.
- Position the appliance in the desired place of installation.
- This appliance may be placed up against walls or other furniture units.
- If the appliance is installed near a heat source, fit a special insulating panel to prevent overheating and malfunction of the appliance.
- To ensure stability, install integrated or built-under dishwashers only under continuous worktops, and screw them to the adjacent units.
- To facilitate the installation procedure, the intake and drain hoses can be positioned in any direction; make sure that the hoses are not kinked, crushed or pulled too tightly.
- A hole at least 8 cm in diameter is required to allow the power supply cable and hoses to pass.
- At the end of the installation, perform a short test of the appliance: open the water tap and check that there are no leaks.
- To install the dishwasher against the back wall, the hoses should be passed through the lower area where there is a dedicated space for them.
- The following spare parts will be available for 7 years after the model is no longer produced: wash pump, drain pump, heating elements; pipes and hoses, valves, filters and acquastop devices; structural and internal parts of the door (separately or as an assembly);

electronic boards and printed circuits; electronic displays; pressure switches; thermostats and sensors, software and firmware, including reset software.

- The following spare parts will be available for 10 years after the model is no longer produced: door hinge and seal; other seals; spray arms; filter unit, baskets, runners and accessories.
- Some spare parts are only available to authorised repairers.
- Not all spare parts apply to all models.
- The EU EPREL database provides information regarding dishwasher performance. The database can be consulted directly using the QR code on the dishwasher's energy label or via the following link https://eprel.ec.europa.eu. In this case, you have to enter the name of the model indicated on the data plate on the side of the door.
  For detailed information on the energy label: www.theenergylabel.eu.

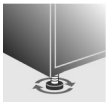

Level the appliance on the floor using the appropriate Allen key to regulate the adjustable feet. This operation is essential for ensuring correct operation of the dishwasher.



Some models are equipped with only one adjustable foot at the rear, which can be adjusted by turning the screw on the lower front part of the appliance.



Building-in a dishwasher underneath a hob is **absolutely forbidden**.
Moreover, dishwashers **may not** be installed directly touching appliances which are **not conventional** built-in kitchen appliances (e.g. fireplaces, stoves, etc.).
When installing the dishwasher in a compartment next to one or more other appliances, it is essential to comply with all the recommendations provided by the appliance's manufacturer (minimum distances, installation procedures, etc.).
Contact your dealer or visit the manufacturer's website to find out if your dishwasher can be installed in a raised position. If it can be, yhe dishwasher and the furniture in which it is installed must be secured in such a way that makes it impossible for it to tip over.
If the dishwasher is installed in a raised position, be extremely careful when pulling out the baskets to prevent objects or the baskets from falling. The appliance may tip over if installed incorrectly.

For free-standing models only

- Installing a hob on top of a free-standing dishwasher is **absolutely forbidden**.
- If the appliance is accessible from one side, the door hinge area has to be covered for safety reasons (risk of injury). The covers are available as an accessory and can be ordered through the Technical Assistance Service.
- The top surface of the dishwashers can be removed to allow installation under a worktop. The **appropriate kit** should be purchased from authorised dealers or via the Technical Assistance Service. This must be carried out by authorised personnel.

2.3 Water supply connection



Preventing the risk of clogging or damage: *if the water pipe is new or has not been used for a long time, before connecting to the water supply check that the water is clear and free of impurities, to prevent damage to the appliance.* ***The dishwasher must always be connected to the water system with new hoses; old or used hoses must never be reused.***

CONNECTING TO THE WATER SUPPLY

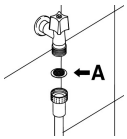

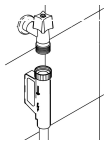

Connect the intake hose to a cold water supply with ¾" gas thread, inserting the filter **A** supplied with the dishwasher. **Take care to screw the hose firmly into place with your hands and then complete by tightening about ¼ of a turn with pliers.**

In dishwashers equipped with the AQUASTOP device, the filters is already fitted inside the threaded ring.

The dishwasher can also be connected to a hot water supply **not exceeding 60°C**. Supplying the appliance with hot water cuts down the washing time be approximately 20 minutes, but slightly reduces its effectiveness. Make the connection to the domestic hot water supply using the same procedure described for connecting to the cold water supply.

Supplementary note regarding the water connection, for the German market:
Before connecting the product to the water supply, make sure that that the water system has been fitted with a safety device to protect drinking water against contamination due to backflow (according to DIN EN 1717). The water valves and/or taps are fitted with these safety devices if the water system of the house has been properly implemented.

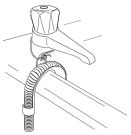

DRAIN CONNECTION

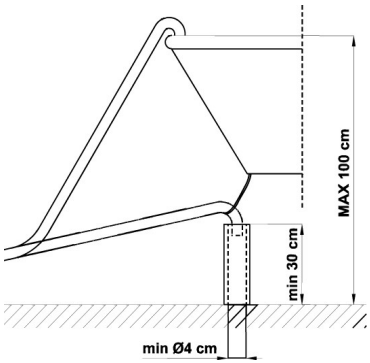

Insert the dishwasher's drain hose into a drain pipe having a diameter of at least **4 cm**, or alternatively, place it inside the kitchen sink using the plastic support provided, taking care not to crush or excessively bend the hose.

It is important to prevent the hose from coming loose and falling. For this purpose, the plastic support is equipped with a hole for tying it to the wall or water tap. The free end should be positioned at a height of between **30 and 100 cm,** and should never be submerged in water. If a horizontal drain extension hose is used (for a maximum 3 m), the drain hose can be placed at a maximum height of.**85 cm** from the ground.

Class of protection against moisture: IPX0

2.4 Electrical connection and precautions

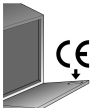

Check that the voltage and the frequency of the mains match the ratings on the name plate of the appliance positioned on the inner edge of the door.



The plug on the supply cord and the corresponding socket outlet must be of the same type and meet the regulations in force.

The plug must be accessible after installation.

Never disconnect the plug by pulling on the power supply lead.



After changing the supply cord, make sure that the bracket which secures the cord is fixed securely in place.



Do not use adaptors or shunt connections in order to avoid the possibility of overheating or burning.

In the event of damage to the supply cord, have it replaced by the manufacturer or an Authorized Technical Service Centre in order to avoid any risk.

Some components are live even with the ON/OFF position. Before performing any maintenance work on the appliance, disconnect it from the electrical power supply.

IF THE APPLIANCE IS PROVIDED WITH A PLUGLESS SUPPLY CORD:



An omnipolar circuit breaker in overvoltage protection class III must be installed in an easily accessible position on the power supply line.



The connection to the mains must be carried out by a qualified technician in accordance to the scheme shown below and the regulations in force.

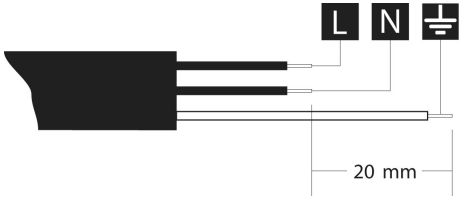

L = brown
N = blue
⏚ = yellow-green

Class of protection against electric shock: I

FOR GREAT BRITAIN ONLY:

This appliance must be earthed.

Fuse replacement

If the mains lead of this appliance is fitted with a **BS 1363A 13A** fused plug, to change a fuse in this type of plug use an **A.S.T.A.** approved fuse to **BS 1362** and proceed as follows:

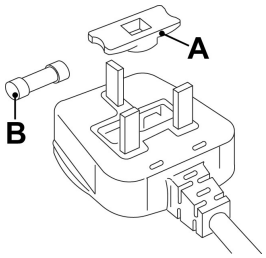

1. Remove the fuse cover **A** and fuse **B**.
2. Fit replacement fuse into fuse cover.
3. Refit both into plug.

The fuse cover must be refitted when changing a fuse *and if the fuse cover is lost the plug* ***must not be used*** *until a correct replacement is fitted.*
Correct replacement are identified by the colour insert or the colour embossed in words on the base of the plug.
Replacement fuse covers are available from your local electrical store.

3. Description of the controls

3.1 Upper panel

All the dishwasher controls are grouped on the upper panel. Switch-on, programming, switch-off, etc. procedures are only possible when the door is open.

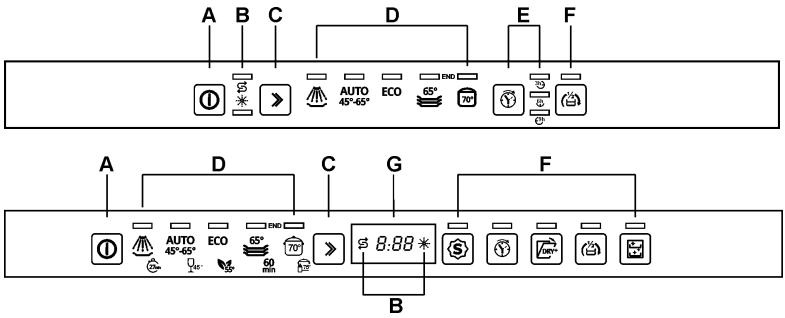

The panel shown is only a guideline example.

A	**ON-OFF BUTTON**
B	**SALT and RINSE AID INDICATOR LIGHTS (depending on the model)**
C	**PROGRAM SELECTION BUTTON**
D	**STANDARD + ADDITIONAL program INDICATOR LIGHTS (depending on the model)**
E	**DELAYED START BUTTON and INDICATOR LIGHTS**
F	**OPTIONS (depending on the model)**
G	**SALT and RINSE AID DISPLAY and INDICATOR LIGHTS**

Information displayed	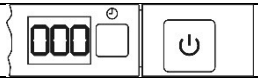
Scheduled program duration	yes
Remaining program time	yes
Delayed start	1 - 24 hours
Error message	**Err**

SETTING THE WASHING PROGRAM AND SWITCHING ON

After identifying the most suitable program with the aid of the programs table:

- Press the **ON/OFF** button **(A)** and wait for the **PROGRAM INDICATOR LIGHT (D)** to illuminate;
- Keep pressing the **PROGRAM SELECTION** button **(C)** until the indicator light corresponding to the desired program illuminates;
- select the option required (if any and if the model provides options);
- close the door; after about **2"** the program will start **LIGHT** will flashing (indicating that the program is being executed).

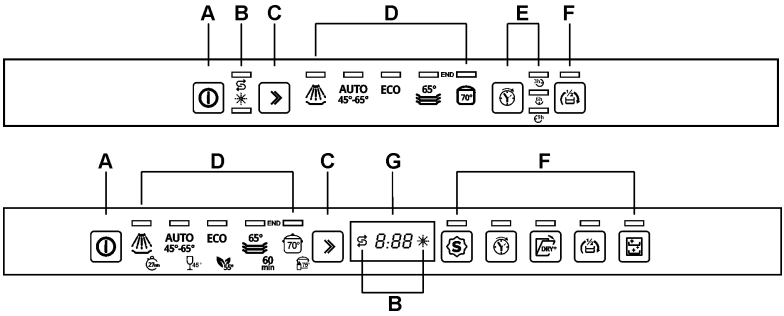

PROGRAM IN PROGRESS INDICATOR LIGHT (on some models only)
When a program is running, a flashing light is projected onto the floor under the right-hand corner of the door. At the end of the program, the light goes out to reduce sleep mode electricity consumption.

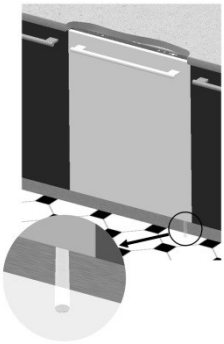

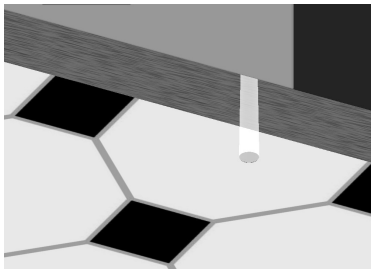

The number, type and the sequence of wash programs depend on the model purchased. Refer to the instruction manual supplied together with the product.

ECO (*) **ECO:** Program with the lowest water and energy consumption for washing normally soiled dishes, even with dried-on residues. The information refers to the **STANDARD EN60436** program (indicated in the programs table) that is the most efficient in terms of combined energy and water consumption. The program is suitable for normally soiled dishes and is used to assess compliance with EU ecodesign legislation.

SOAK
Pans and dishes while waiting for another wash cycle

65° ½ **½ LOAD**
For washing just a few normally soiled dishes, washed immediately after use

65° **MIX 65°**
Normally soiled mixed loads such as dishes and pans, even with dried-on residues

75° **HYGIENE 99,9%**
Intensive cycle for plates, pots, pans, feeding bottles. Ideal for baby dishes or if there are allergy sufferers in the family in order to achieve a higher level of hygiene.

AUTO 45°-65° **AUTO SENSOR**
For normally soiled mixed loads such as dishes and pans. The dishwasher determines the washing parameters automatically.

55° **GREEN EXPRESS**
Quick cycle with low water and energy consumption. For normally soiled mixed loads, washed immediately after use.

45° **CRYSTAL 45°**
Wine glasses and lightly soiled fine china.

50° **DELICATE 50°**
Wine glasses and lightly soiled dishes.

27min **EXPRESS 27'**
Quick cycle for lightly soiled dishes, washed immediately after use.

SILENT
Normally dirty dishes, even with dried-on residues. Ensures maximum noise reduction and is therefore ideal if you wish to run it during the night.

60 min **FULL EXPRESS 60'**
Quick cycle for normally soiled mixed loads such as dishes and pans, even with dried-on residues. Dishes are washed and dried in 60 minutes.

70° **INTENSE 70°**
Heavily soiled plates, pots and pans, even with dried-on residues

If the dishwasher door is open or not properly closed, the washing cycle will not start.

For Singapore market:
"ECO" is the recommended program designed to minimize water consumption for normally soiled tableware at rated dishwasher capacity.

HYGIENE
Increases the temperature of the final rinse to obtain a greater level of hygiene. Suitable for the intensive washing of plates, pots, pans, cutting boards, feeding bottles. Ideal for baby dishes or if there are allergy sufferers in the family.

NOTE: The Hygiene 99.9% program has been tested by an external laboratory (VDE) without an option selected.
In order to be effective, the cycle should not be interrupted.

AUTOMATIC DOOR OPENING – DRY ASSIST
(always included in the ECO program)
(it may be included in other programs, please refer to the manual supplied with the product).
The program ends with a drying cycle that consists of a time during which the door is closed, and a time during which the door is slightly open (just waiting, to assist drying). The duration depends on the program and model.
Any intervention (opening / closing the door, switching off etc.) during this stage will end the program early.
The program can be interrupted during the drying cycle and the dishwasher can unloaded before the cycle has completely ended, which is indicated by a visual and/or audible alarm (depending on the model), but best drying results may not be obtained.
The complete program ends only when indicated by a visual and/or audible signal (depending on the model).



There must be sufficient space available for the door to open. The door must not be forced open and closed before the wash cycle has ended completely.

(*) Standard program according to **EN60436**. The DRY ASSIST option (if the 

button is present) must be active.

REFERENCES for the **ENERGY LABEL** supplied with the dishwasher:

- The information refers to the **EN 60436 - STANDARD** program (indicated in the program table), which is the most effective in terms of combined energy and water consumption. The program is recommended for normally soiled dishes and is used to assess ecodesign compliance with EU legislation.
- Drying efficiency is based on a scale from **"G"** (minimum efficiency) to **"A"** (maximum efficiency).

Notice for testing institutes
Testing institutes are provided with guidelines for comparative tests (e.g. according to EN60436).
please request the guidelines by contacting us at the following e-mail address:
dishwasher@test-domestic-appliances.com
When making a request, please specify the model (MOD) and the serial number (S/N) indicated on the plate on the side of the door.

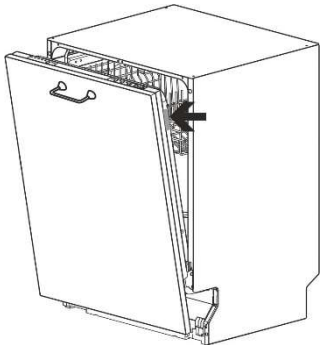

3.2 Washing programs



Before starting a washing program make sure that:

- *The water supply tap is **open**.*
- *The softener **container** contains **regenerating salt**.*
- *The **correct amount of detergent** has been added to the **dispenser**.*
- *The baskets have been **correctly loaded**.*
- *The spray arms are able to **rotate freely** and without obstruction.*
- *The dishwasher door is securely closed.*

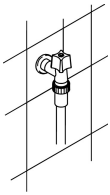



Warning:
during the initial phase of the washing program, the operation of sprayers is not perceived because they start rotating about 5 minutes after the start. This is the normal operation of the washing cycle.

CYCLE COUNTING (on some models only)
This function allows you to view the total number of cycles carried out since installation.

Press the S button for 3 seconds to display the two screens that show the number of cycles carried out by the machine.

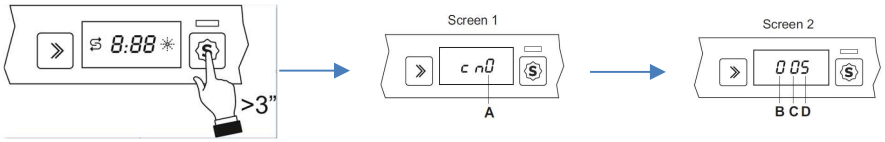

A: thousands **B:** hundreds **C:** tens **D:** units
ABCD: total number of wash cycles carried out

OPTION SELECTION
The options can be selected by pressing the relative button, the light turns on to confirm activation.
All options are **deactivated** at the end of the wash cycle.

Option			Description
1	**SPECIAL**		Creates additional programs.
2	**DRY ASSIST**		Allows the dishes to be dried perfectly even at low rinse temperatures, with significant energy savings. It starts automatically if the selected program is compatible with it. If it is not required, press the button to disable it.
3	**EXTRA DRY**		Modifies some of the parameters to ensure improved drying.
4	**½ LOAD FLEXY ZONE**		Ideal if just a few dishes need to be washed, allowing energy savings and a shorter wash cycle.
5	**DELAY**		Allows the wash cycles 1 or 3 to be delayed by up to 9, 12 or 24 hours depending on the models.
6	**SELF CLEAN**		Dishwasher cleaning cycle. Must be started with the machine empty, without dishes.



SPECIAL (if present)
Allows you to enable additional programs when selected together with any wash cycle. After having selected the required wash cycle, press the button (the light turns on). It turns off automatically when the cycle has finished.



½ LOAD FLEXI ZONE (if present)
Ideal if just a few dishes need to be washed, allowing energy savings. The dishes should be placed in both baskets and less detergent should be placed in the detergent dispenser compared to the amount used for a full load.



EXTRA DRY (if present)
The option modifies the parameters to ensure improved drying.
Suitable for loads that contain dishes that are difficult to dry such as pots, non-stick pans and plastic containers.

DRY ASSIST (if present)
It starts automatically if the selected program is compatible with the option. It can be disabled before starting the program.
The door opens automatically, allowing the dishes to be dried perfectly even at low rinse temperatures, and therefore resulting in significant energy savings. The first part of the drying cycle takes place with the door closed. The door then opens automatically by a few centimetres. Any intervention (opening / closing the door, switching off etc.) during the drying cycle (both when the door is closed or open) will end the program early.
The program can be interrupted during the drying cycle and the dishwasher can unloaded before the cycle has completely ended, which is indicated by a visual and/or audible alarm (depending on the model), but best drying results may not be obtained.
The complete program ends only when indicated by a visual and/or audible signal (depending on the model).

There must be sufficient space available for the door to open. The door must not be forced open and closed before the wash cycle has ended completely.



DELAY (if present)
Press the **DELAY** button to set the dishwasher cycle to start during the required time period (e.g. night). According to the model, this may be indicated on the display or by specific lights. **The option cannot be selected once the cycle is running**. To cancel the setting, press the button several times until the lights switch off or until the number on the display is reset. After the door has been closed, the dishwasher will carry out a pre-wash cycle, after which the set “cycle delay” option will be activated.



SELF CLEAN (if present)
Dishwasher cleaning cycle. The cycle should be started with the machine empty, without dishes. It is recommended to run the program every 2-3 months, using special dishwasher detergents. The light flashes during operation. At the end of the cycle it remains on and cycle lights **4 and 5** flash.
The display (if available) shows “End”.



"Some dishwasher models are fitted with lights inside the chamber. The lights come on when the door is opened by about 35 cm.
The light switches off when the door is closed.
If the door is left open, the light will turn off automatically after approximately 14 minutes.

CANCELLING THE CURRENT PROGRAM

- To cancel the currently selected program open the door and hold down the **PROGRAM SELECTION (C)** button for a few seconds until the **indicator lights** for programs **4** and **5** illuminate simultaneously (marked "end").



- Close the door.
- After approximately 1 minute the dishwasher will advance to the end of cycle.

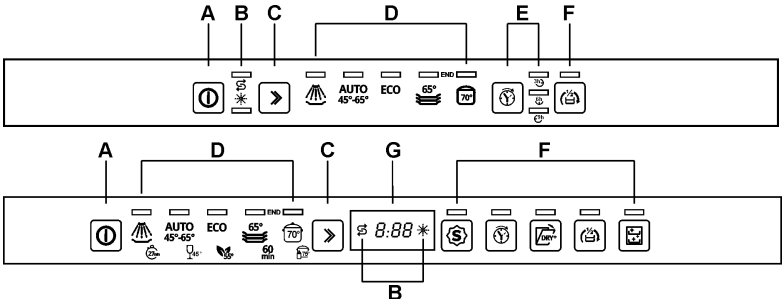

CHANGING THE PROGRAM

To change the program in progress, simply open the door and select a new program. When the door is closed the dishwasher will automatically select the new program.



TO SAVE ON ENERGY! … AND PROTECT THE ENVIRONMENT

- *If the manufacturer's instructions and recommendations are followed, washing the same number of similarly soiled dishes in a dishwasher consumes less water and energy than if they were washed by hand.*
- *Always use the dishwasher **with a full load**.*
- *Load the dishwasher as indicated in the instructions manual. If the dishwasher is loaded incorrectly, it may lead to poor results as well as waste water, energy and detergent.*
- *Do not wash dishes under running water before placing them in the dishwasher. It would just waste water and energy.*
- *Use the washing program that is **most appropriate** for each type of load.*
- *If available, connect the dishwasher to a hot water supply up to 60°C.If the manufacturer's instructions and recommendations are followed, washing the same number of similarly soiled dishes in a dishwasher consumes less water and energy than if they were washed by hand.*



TO CUT DOWN ON DETERGENT CONSUMPTION! ... AND PROTECT THE ENVIRONMENT

The phosphates contained in dishwasher detergents are harmful to the environment. To avoid using excessive amounts of detergent and to save on electricity, observe the following:

- ***separate the more delicate items** from dishes that are more resistant to aggressive detergents and high temperatures;*
- ***do not pour** detergent directly onto the dishes.*



*If the door has to be opened while washing is in progress, the program will be interrupted. The relative light will keep flashing and a beeper will signal that the cycle has not been completed. You must wait about **1 minute** before closing the door to restart the program. When the door is closed the program will continue from where it was interrupted. This operation should only be carried out **if strictly necessary**, because it might cause problems in execution of the program.*

SWITCHING OFF

At the end of the program the beeper sounds briefly and the **lights** of programs no. **4** and **5** (marked "end") flash.

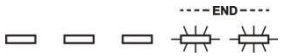

To switch off the dishwasher, open the door and press the **ON/OFF button (ON)**.

ENERGY MANAGEMENT

After **5 minutes of waiting** (washing cycle completed, stopped or set but not started) the dishwasher switches off.

REMOVING THE DISHES

At the end of the washing program, wait at least **20 minutes** before removing the dishes, to allow them to cool. To ensure that any drops of water left in the top basket cannot drip onto the dishes still in the bottom basket, you are advised always to **empty the bottom basket first**.

4. Operating instructions

After having installed the dishwasher, remove the basket retainers and prepare the machine for use as follows:

- Regulate the water softening system;
- Add regenerating salt;
- Add rinse aid and detergent.

4.1 Setting the water hardness

- Press and hold the **program selection** button until the salt light flashes.
- The program lights **(D)** / display **(G)** indicate the current setting.
- Press the program selection button to select the water hardness level.

Depending on the model

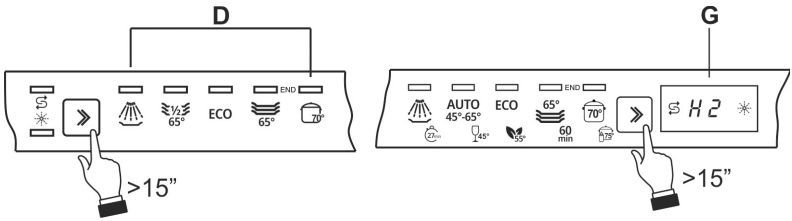

After carrying out the adjustment or displaying the current setting, if you do not touch the button for a few seconds the dishwasher will automatically exit from adjustment mode and return to the standard operating mode.

WATER HARDNESS TABLE

WATER HARDNESS		SETTINGS		
German degrees (°dH)	**French degrees (°dH)**			
0 – 6	0 – 11	**H0**	All indicator lights off	
7 – 10	12 – 18	**H1**	One indicator light on	
11 – 15	19 – 27	**H2**	Two indicator lights on	
16 – 21	28 – 37	**H3**	Three indicator lights	
22 – 28	38 – 50	**H4**	Four indicator lights on	
29 - 50	51 – 90	**H5**	Five indicator lights on	

Contact your local water board for information on the hardness of your water supply. Default settings: **H3 - 16-21°dH** – **28-37°dF**

4.2 Adding the salt

The amount of scale contained in the water (water hardness index) can cause whitish staining on the dry dishes, which tend to become dull over time. The dishwasher is equipped with an automatic softening system which uses a special regenerating salt to reduce the hardness of the water.

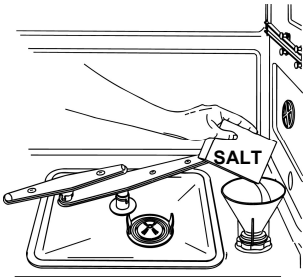

When using water of medium hardness, the regenerating salt container should be refilled after approximately **20 washing cycles**. The salt container can hold approximately **1 kg** of salt in grains. Some models are equipped with an optical no-salt indicator. In these models, the cap of the salt container contains a green float which descends as the salt concentration in the water drops. When the green float can no longer be seen through the transparent cap, the container must be topped up with regenerating salt. The container is situated at the bottom of the dishwasher.

The salt prevents the formation of scale deposits.

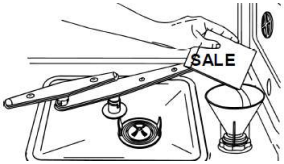

- Remove the lower basket.
- Unscrew the cap of the salt container by turning it anticlockwise.
- When using the dishwasher for the first time, fill the container with a litre of water.
- Pour salt (approx. 1 kg) into the container using the funnel provided with the dishwasher.
- When finished, remove any salt residues before screwing the cap back on.

In order for the water softening system to give fault-free service, the appliance performs a regeneration cycle of the system at regular intervals.
The regeneration process consists of several stages. It starts at the end of the last rinse cycle, after the amount of water indicated in the mains water hardness setting has been reached during the wash cycle, and finishes at the beginning of the following wash cycle.
The regeneration process increases the cycle time and consumption of water and electricity.
Below is an overview of consumption of regeneration the softening system using the Eco program with a water hardness setting of H2.

Water consumption according to model [refer to the programs table] (litres)	Regeneration frequency (number of cycles)	Water consumption during regeneration (litres)		Energy consumption during regeneration (Wh)		Duration of the regeneration process (min)	
		At the end of the last rinse	At the beginning of the following wash cycle	At the end of the last rinse	At the beginning of the following wash cycle	At the end of the last rinse	At the beginning of the following wash cycle
7	8	0.2	4 (10x0.4 litres)	0.3	1.2	6	4



- *Each time the salt container is refilled, make sure that **the cap is securely closed**. The mixture of water and detergent must never penetrate the salt container, as this would compromise the operation of the regeneration system. In this case warranty cover will be forfeited.*
- ***Only use regeneration salt specifically for domestic dishwashers. Do not use table salt**, since it contains insoluble substances that could damage the water softener system.*
- *After having added salt, run a wash cycle to remove any excess salt. In this way, the excess saline solution will be immediately removed by the water; the prolonged presence of salt water inside the tank may lead to **corrosion**.*



***Be careful not to confuse the salt and detergent packages**; adding detergent to the salt container will **damage** the water softening system.*

4.3 Adding the rinse aid

The detergent and rinse aid dispensers are situated on the inner part of the door: the **detergent dispenser** is on the left, and the **rinse aid dispenser** is on the right.

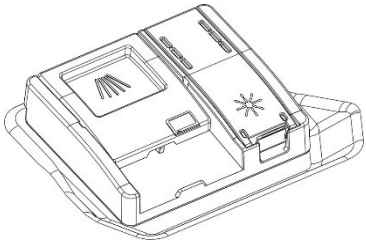

The rinse aid helps the dishes dry faster and prevents the formation of scale deposits and staining; it is automatically added to the water during the final rinse cycle, from the container situated on the inner side of the door.

To add rinse aid:

- Open the dispenser by pressing and lifting the tab on the cover.
- Top up again when the rinse aid indicator light turns on.
- Close the cover, a click indicates when it is closed.
- Use a cloth to remove any spillage of rinse aid which might lead to the formation of excess foam.

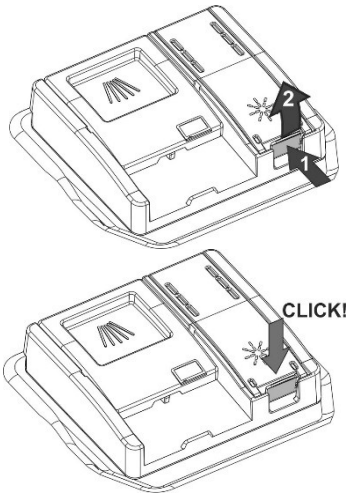

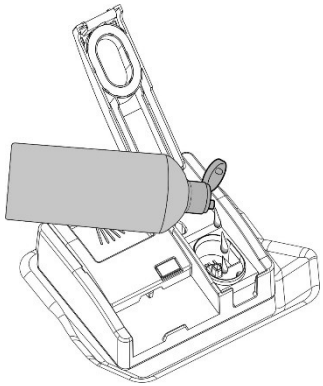

Adjusting the rinse aid dispenser mode

- Press and hold the **program selection** button, after approximately **15 seconds** the salt light flashes, keep it pressed until the **rinse aid light**.
- The program lights **(D)** / display **(G)** indicate the current setting.
- Then press the **program selection** button several times to select the required dosage.

Depending on the model

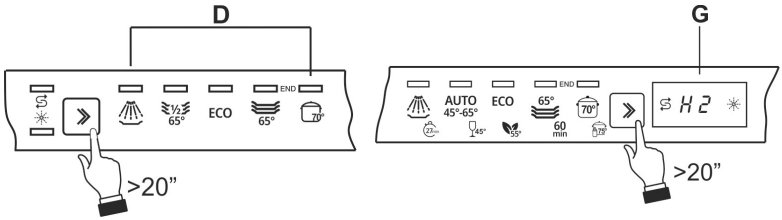

After carrying out the adjustment or displaying the current setting, if you do not touch the button for a few seconds the dishwasher will automatically exit from adjustment mode and return to the standard operating mode.

RINSE AID ADJUSTMENT TABLE			
0 – not dispensed	**b0**	All indicator lights off	
minimum 2 ml	**b1**	One indicator light on	
3 ml	**b2**	Two indicator lights on	
4ml	**b3**	Three indicator lights on	
5ml	**b4**	Four indicator lights on	
maximum 6 ml	**b5**	Five indicator lights on	

Default settings: **b4 - 5 ml**



- *The amount of rinse aid must be **increased** if the washed dishes appear dull or feature circular stains.*
- *If, on the other hand, the dishes are sticky or have white streaks, it is necessary to **reduce** the rinse aid setting.*

4.4 Adding the detergent

- Open the detergent dispenser cover by lightly pressing the button **P**.
- Add the detergent or tablet.
- Close the cover by sliding it until it stops, indicated by a click.

The dispenser will open automatically during the wash cycle.
Only add the detergent or tablet if the dispenser is dry.

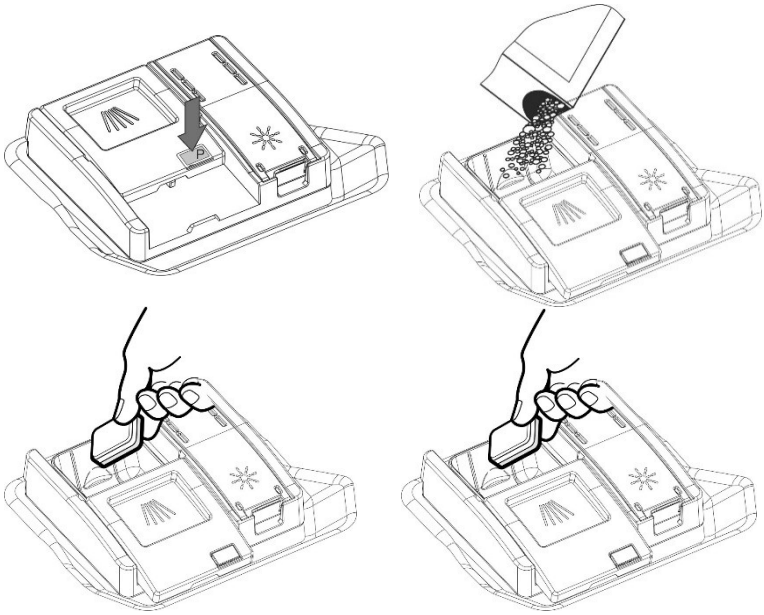

*With the exception of the **SOAK** program, before every washing cycle it is necessary to add the required amount of detergent to the **detergent dispenser**. The rinse aid, on the other hand, should only be added as required.*



- *When a program with a hot pre-wash is selected (see program table), extra detergent must be placed in the cavity.*
- *Use **only** detergents specially formulated for dishwashers.*
- *The detergent packs must be sealed and stored in a dry place to prevent the formation of lumps which may negatively affect washing results. Once opened the detergent packs should not be kept for too long, otherwise the detergent loses its effectiveness.*
- *Do not use detergents for washing dishes by hand because they may affect the operation of the dishwasher.*
- *Add the correct amount of detergent. An insufficient amount of detergent will result in a partial removal of dirt from the dishes, whereas an excessive amount is wasteful and does not improve the washing results.*

*For the safeguarding of the environment we recommend the use of **phosphate- and chlorine free** detergents.*



The introduction of detergent into the rinse aid dispenser, even in liquid form, will damage the dishwasher.

4.5 General warnings and recommendations



Before using the dishwasher for the first time, it is advisable to read the following recommendations concerning dish types to be washed and their loading.
There are generally no constraints on the washing of domestic dishes, but in certain cases it is necessary to take their characteristics into account.
Before loading the dishes into the baskets it is necessary to:

- *remove coarse food remains: e.g. bones, fish-bones, etc. which may clog the filter or damage the wash pump.*
- *soak any pots or pans with burnt-on food remains on the bottom to facilitate removal, then load them into the **lower** basket.*

There is no need to pre-wash the dishes under running water before loading them into the baskets since this only wastes water.

Correct loading of the dishes helps ensure optimal washing results.



WARNING!

- *Make sure that the dishes are securely in place so that they cannot tip over or obstruct the rotation of the spray arms during the washing cycle.*
- *Do not place very small objects in the baskets as these could fall and obstruct the spray arms or the wash pump.*
- *Containers such as cups, bowls, glasses and pots should always be loaded with the opening facing downwards and with any cavities at an angle, to allow the water to drain out.*
- *Do not stack dishes or place them in such a way that they cover one other.*
- *Do not place glasses too close together because they may knock against each other and break, or there might be staining at the point where they touch.*

MAKE SURE that the items being washed are dishwasher-safe.

Items which are not dishwasher-safe:

- ***Wooden dishes, pots or pans:*** *these may be damaged by the high washing temperatures.*
- ***Handcrafted items:*** *these are rarely suitable for washing in a dishwasher. The relatively high water temperatures and the detergents used may damage them.*
- ***Plastic dishes:*** *heat resistant plastic dishes must be washed in the upper basket.*
- ***Dishes and objects in copper, tin, zinc or brass:*** *these tend to stain.*
- ***Aluminium dishes:*** *items made of anodised aluminium may lose their colour.*
- ***Silverware:*** *silver items may stain.*
- ***Glass and crystal:*** *in general, glass and crystal objects can be washed in the dishwasher. However, certain types of glass and crystal may become dull and lose their clearness after many washings. Therefore, for these items we recommend using the least aggressive program available.*
- ***Decorated items:*** *the decorated objects available on the market are generally able to withstand washing in the dishwasher, although the colours may fade after many washes. If in doubt as to the fastness of the colours, it is advisable to wash just a few items at a time for approximately one month.*

4.6 Using the baskets

Capacity, including serving dishes: **12 or 13 place settings depending on model** (see energy label).

LOWER BASKET

The lower basket receives the full force of the lower spray arm, and should therefore be used for the “toughest” items with a heavier degree of soiling.

All types and combinations of loads are permitted, provided that the dishes, pots and pans are arranged with all the soiled surfaces exposed to the water jets coming from the bottom.

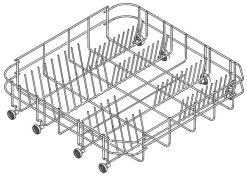

With fixed supports

To make the most of the space inside the basket when loading large items, certain models are equipped with tip-up supports for plates in 2 or 4 sections.

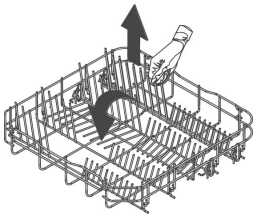

With tip-up supports

BOTTOM BASKET INSERTS

Some models are equipped with bottom basket inserts which improve the drying of dishes. The inserts are supplied in the accessories bag; to use them, simply fit them into place as shown. The inserts are supplied in the accessories bag; to use them, simply fit them into place as shown.

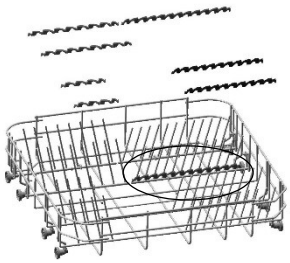

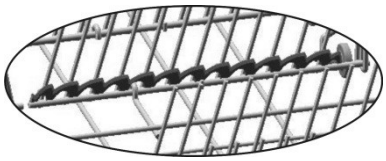

LOADING THE LOWER BASKET

Carefully load flat plates, soup plates, dessert and serving dishes, positioning them vertically. Pots, pans and their covers must be loaded upside down. When loading soup plates and dessert bowls, be sure to leave a gap between them.

Loading examples:

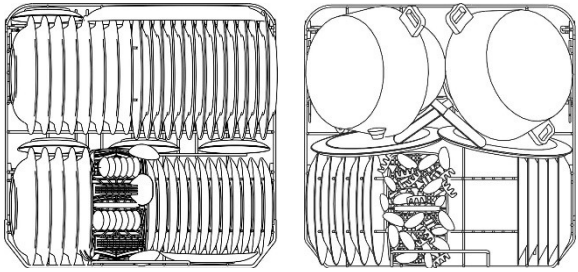

UPPER BASKET

The upper basket should be loaded with small or medium-sized items such as glasses, small plates and saucers, tea or coffee cups, shallow bowls and light objects. If the upper basket is used in the lowermost position, it can also be loaded with serving dishes, provided they are only lightly soiled.

LOADING THE UPPER BASKET

Load plates facing forward; cups, bowls etc. must always be facing downwards. The left side of the basket can be loaded with cups and glasses on two levels. In the centre section, plates and saucers can be loaded vertically into the supports provided.

Loading examples:

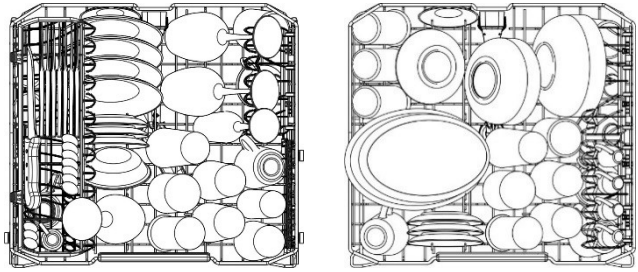

CUTLERY BASKET (on some models only)

The basket is suitable for all types of cutlery, except long items that may **interfere** with the upper spray arm. The cutlery should be arranged in the spaces in the upper racks to allow the water to pass effectively between the items.

Forks and spoons should be positioned with the **handle facing downwards**, taking care not to injure yourself with the prongs of the forks. **Knives** should be placed in the tray on the upper rack or in the cutlery drawer, if present (depending on the model), otherwise position them with the **handles facing upwards**.

Ladles, wooden spoons and kitchen knives can be placed on the upper rack, **making sure that the blades of the knives do not protrude from the basket.** The upper racks can be opened in order to insert, for example, small items.

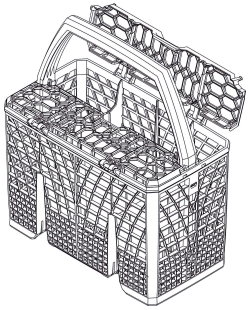

The cutlery basket slides across the dishwasher and can be **placed in any position** to allow optimal use of the space in the bottom basket.

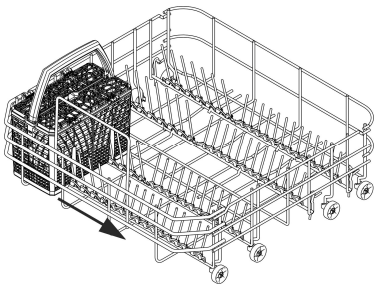

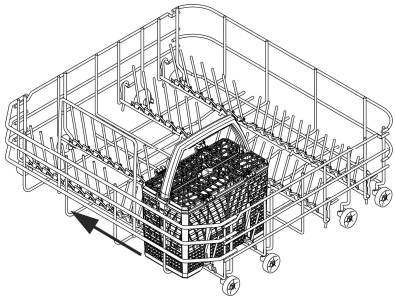

TOP CUTLERY BASKET (on some models only)

The basket is designed to take cutlery, placed in the spaces provided, and long utensils, positioned lengthwise.

The “drawer” extraction system makes the basket easier to load, but it can also be taken completely off its runners by removing the retainers (as shown here).

Take great care to replace the retainers to ensure that the basket does not come off the runners accidentally.

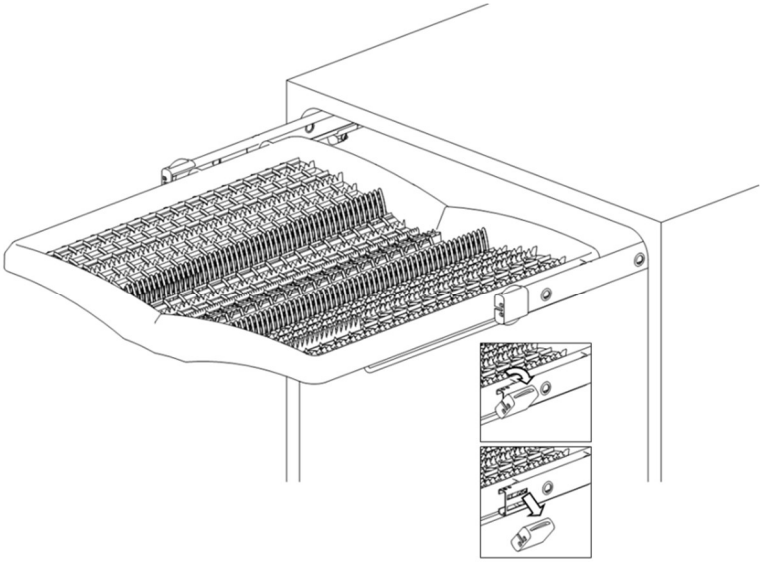

FLEXIDUO TOP CUTLERY BASKET (on some models only)

This comprises **two independent** sliding, pull-out tray racks for easier loading/unloading of cutlery. Various loading systems and configurations are possible. For example, **tea cups** can be loaded with the **right-hand** rack set in the **low position,** while the left-hand rack or both can be removed to allow l**arge dishes** to be put in the **top basket.**

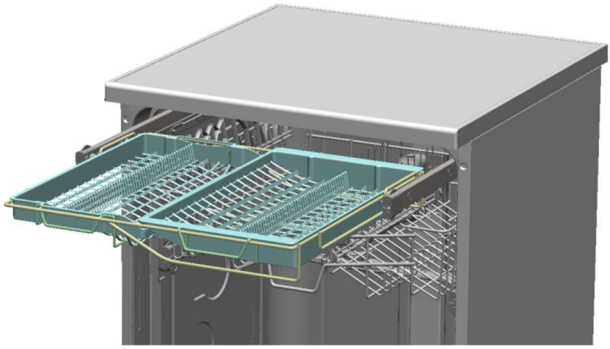

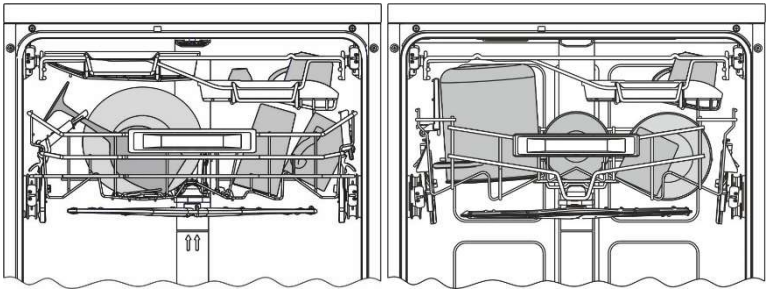

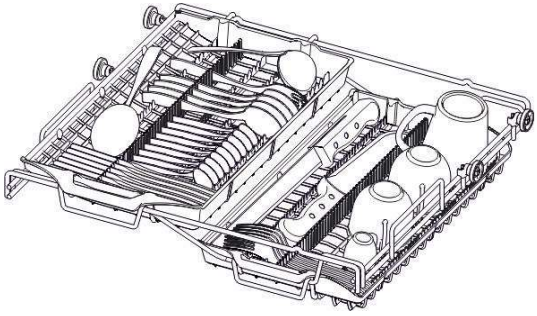

EXAMPLES OF LOADING FOR INTENSIVE DIRT

12 standard place setting

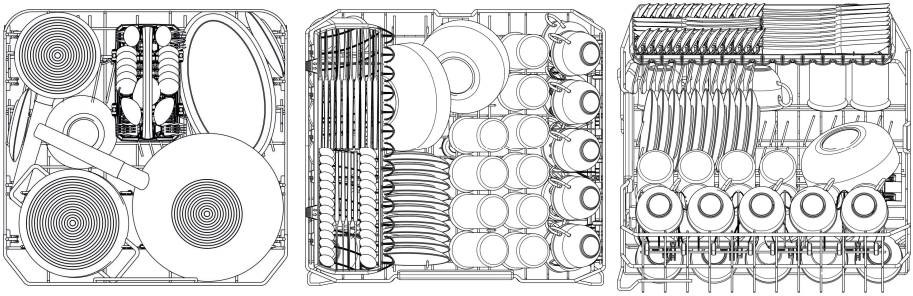

If the bottom basket inserts are of the fold-down type, they should be laid flat for easier loading.

13 standard place setting

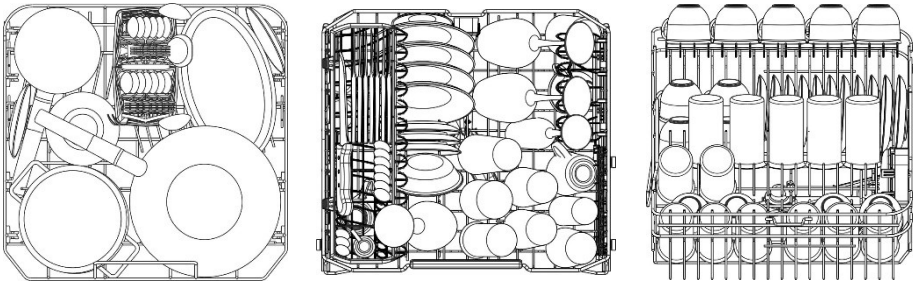

If the bottom basket inserts are of the fold-down type, they should be laid flat for easier loading.

13 standard place setting
TOP CUTLERY BASKET (on some models only)

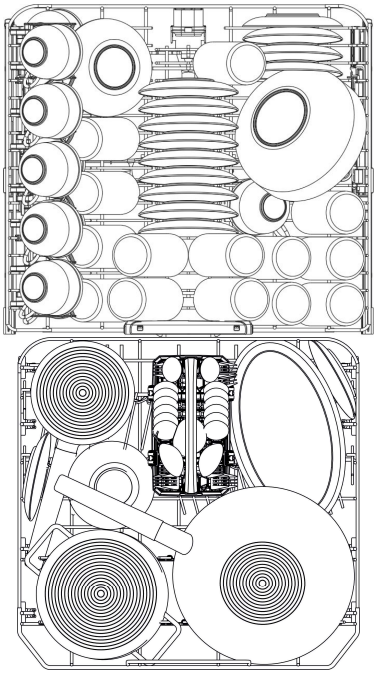

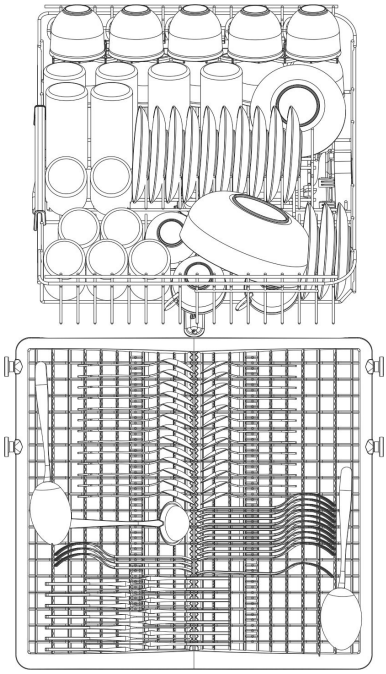

If the bottom basket inserts are of the fold-down type, they should be laid flat for easier loading.

13 standard place setting
FLEXIDUO TOP CUTLERY BASKET (on some models only)

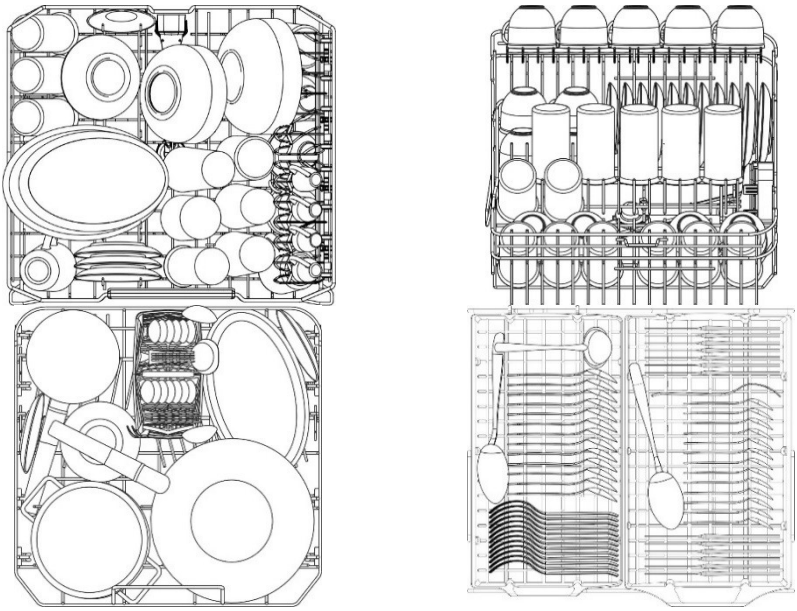

If the bottom basket inserts are of the fold-down type, they should be laid flat for easier loading.

UPPER BASKET EQUIPMENT
(depending on the model)

Cutlery tray
For knives, spoons (tea and dessert) and long objects. The ends are designed to hold long stemmed glasses.
- It can be removed by pressing and pushing the release levers **(B)** at the same time.
- It has to be lowered if the upper basket is in the topmost position. Press the catches **(G)** simultaneously.

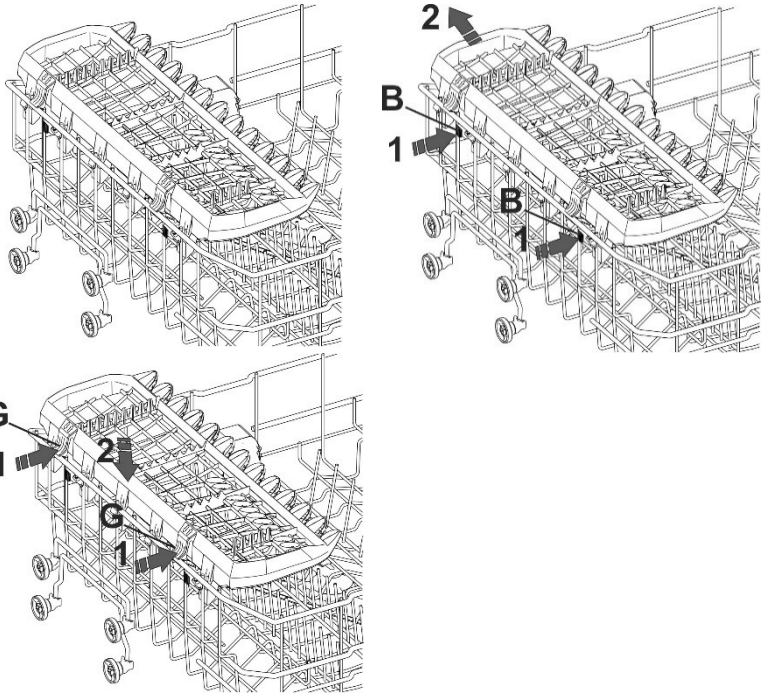

Fold-down shelves

For mugs, cups and long objects. The ends are designed to hold long stemmed glasses

When not used they can be moved to a vertical position (until a click is heard).

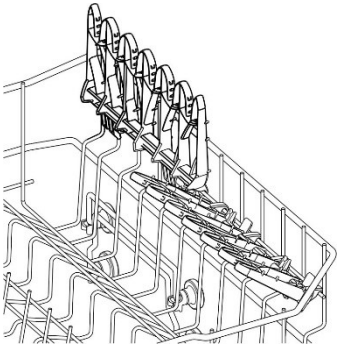

Shelves with expandable wings

For small objects, mugs and cups.

They can be used either closed or open (pull the upper, sliding part). To close them, press the release device (S) and slide them downwards.

The ends are designed to hold long stemmed glasses (even when closed).

When not used they can be moved to a vertical position (until a click is heard).

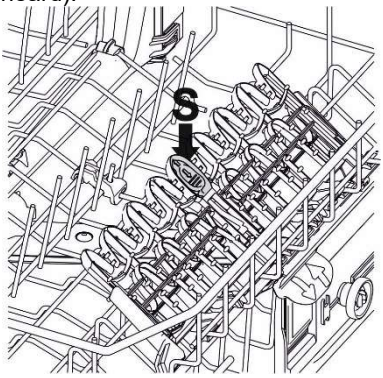

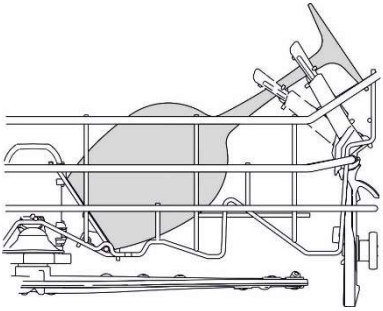

Fold-down tines

These can be secured in a vertical position, resting on the bottom of the basket if unused, or placed in an intermediate position, as required.
The single tine on the right is ideal for supporting long stemmed glasses.

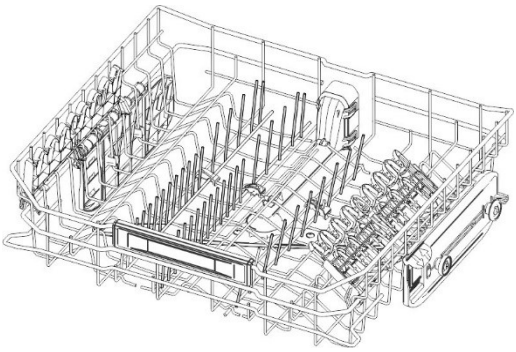

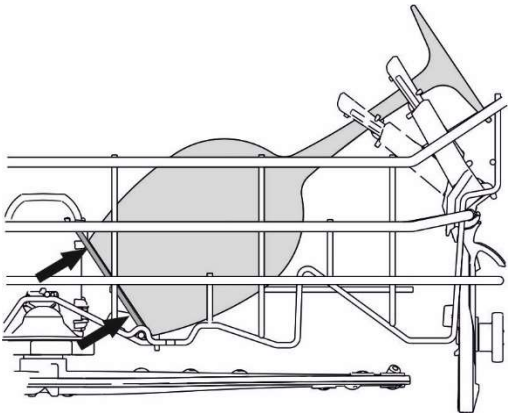

ADJUSTING THE UPPER BASKET

The height of the top basket can be adjusted to allow large dishes or pans to be placed in the bottom basket. The adjustment procedure may be type **A** or **B**, depending on the dishwasher model purchased.

Version A: pull-out with adjustment in **two positions.**

- Pull out both the basket guides.
- Remove the stops, first releasing them as shown in the diagram.
- Pull out the basket.
- Fit the upper or lower pair of wheels into the guide, depending on the setting required;
- Return the stops to their original position.

The left hand and right hand sides of the basket **must always be set at the same height**.

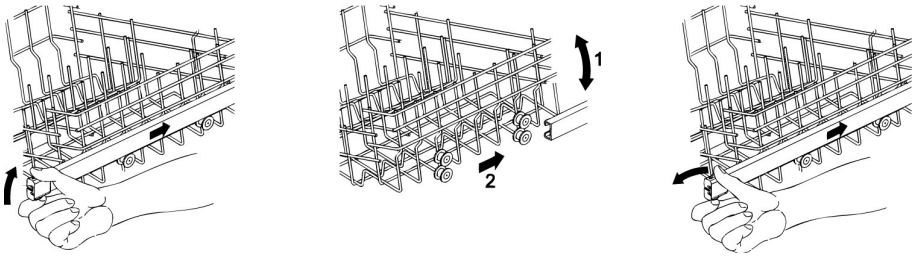

Version B: with adjustment in **three positions** on both sides.

The sides of the basket **must always be set at the same height**.

- Raise the basket by pulling on the top edge **(1)**, to the first or second catch depending on the height required.
- To lower the basket, first release it by pulling the release lever **(2)**.

Adjustment is also possible with the basket loaded, but in this case when lowering the basket it should be held steady with one hand to avoid knocking the dishes.

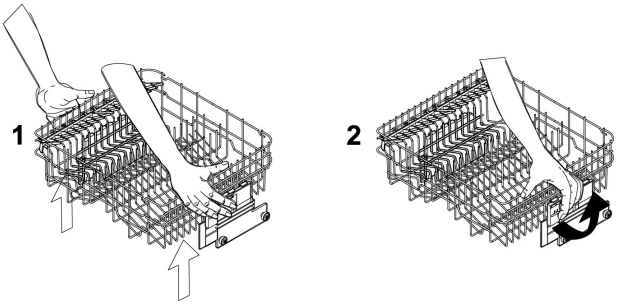

5. Cleaning and maintenance



Before carrying out any work, always unplug the appliance from the electrical supply or switch off the omnipolar circuit breaker.

5.1 General warnings and recommendations

Avoid the use of acidic or abrasive detergents.
Clean the outer surfaces and door-lining of the dishwasher regularly using a soft cloth moistened with water or with a normal detergent suitable for painted surfaces. Clean the door gaskets with a damp sponge. Periodically (once or twice a year) it is advisable to clean the tank gaskets using a soft cloth and water to remove any deposits.
If the dishwasher is used every day, we recommend cleaning the chamber and the water circuit monthly using a product that is specific for domestic dishwashers.

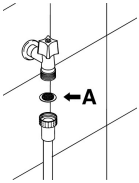

CLEANING THE WATER INTAKE FILTER
The water intake filter **A** located at the outlet of the water supply tap needs to be cleaned periodically. After having closed the water supply tap, unscrew the end of the water intake hose, remove the filter **A** and clean it delicately under running water. Reassemble filter **A** in its seat and carefully screw the water intake hose back into position. We recommend that you check and clean it, if necessary, at least once a year.

CLEANING THE SPRAY ARMS
If the dishwasher is used every day, we recommend that you clean it once a week. The spray arms can be easily removed for periodic cleaning of the nozzles, to prevent possible clogging. Wash them under running water and carefully replace them in their seats, **checking that their rotary movement is in no way impeded**.
To remove the **upper** spray arm, unscrew locking ring **R**.

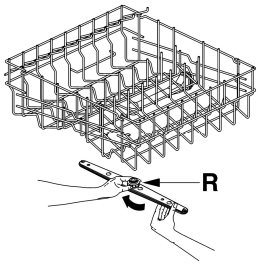

- To remove the **lower** spray arm, simply lift it up, pulling by the central part.
- To remove the **orbital** spray arm assembly, take hold of the longer arm and pull the orbital unit upward. Wash the arms under a jet of running water and return them carefully to their seat. **After reassembly, check that the spray arms turn freely.** Otherwise, check that they have been installed correctly.
- To remove and clean the **planetarium** sprayer follow the instructions provided.

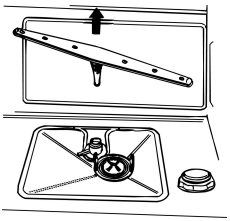

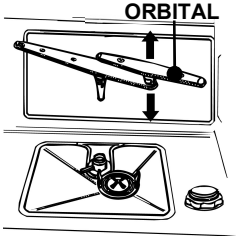

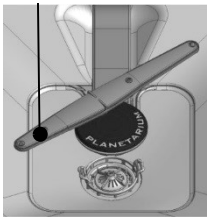

CLEANING THE FILTER UNIT

If the dishwasher is used every day, we recommend that you clean it once a week.

- It is advisable to periodically inspect the centre filter **C** and, if necessary, to clean it. To remove the filter, grip the tabs, turn them anticlockwise and lift upwards;
- push the centre filter **D** from the underside to remove it from the micro-filter:
- separate the two parts which make up the plastic filter by pressing the body of the filter in the zone shown by the arrows;
- remove the centre filter by lifting it upwards.

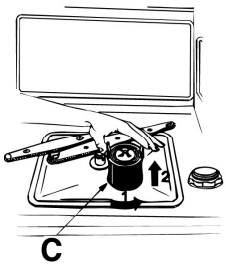

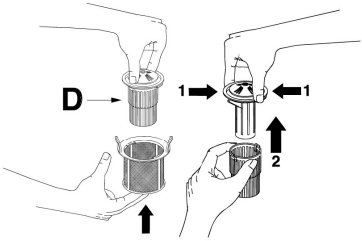

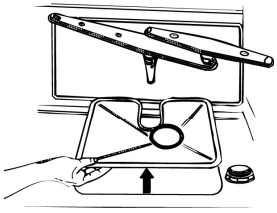

CLEANING THE FILTER UNIT (models with planetarium sprayer)
If the dishwasher is used every day, we recommend that you clean it once a week.

- It is advisable to periodically inspect the centre filter and, if necessary, to clean it.
- remove the planetarium sprayer follow the instructions provided.
- push the centre filter **D** from the underside to remove it from the micro-filter:
- separate the two parts which make up the plastic filter by pressing the body of the filter in the zone shown by the arrows;
- remove the centre filter by lifting it upwards.

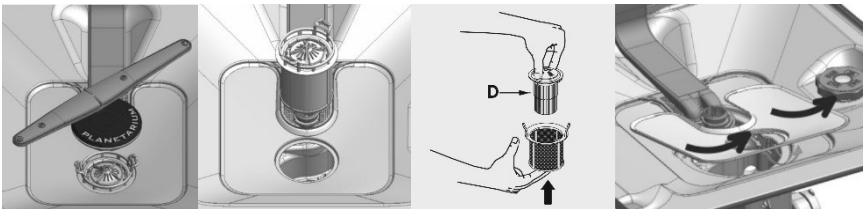



GENERAL WARNINGS AND RECOMMENDATIONS FOR CORRECT MAINTENANCE:

- *The filters should be cleaned **under running water** using a stiff brush.*
- ***When removing the filter**, take care that there are no food residues on it. If any residues fall into the washing pit they might block hydraulic components, or foul the spray arm nozzles.*
- *It is essential to **thoroughly clean the filters** according to the above instructions: the dishwasher cannot function if the filters are clogged.*
- ***Carefully replace** the filters in their seats, to avoid damaging the wash pump.*

6. Troubleshooting. What to do if...

Fault	Possible cause	Solution
The salt light does not turn on	There is still enough salt	Check the fill level
The rinse aid light does not turn on	There is still enough rinse aid	Check the fill level
Water collects at the bottom of the dishwasher	The water inlet hose is kinked or crushed	Check the route of the hose
	The drain siphon is clogged	Make sure that the siphon is not clogged or partially clogged
	The filter unit is clogged	Clean the filters as indicated in the manual
Cutlery not dry	Water in the bowls of spoons or ladles	Cutlery (e.g. serving spoons) in the cutlery drawer (if present), on the bottom of the basket or on the fold down shelves at the side must be arranged with their bowls facing downwards.
Tea or lipstick residues on the dishes	Wash temperature too low	Check the fill level
	Detergent insufficient or unsuitable	Check the fill level
	Cutlery arranged incorrectly in the cutlery basket	Do not place items of cutlery on top of one another or allow them to touch one another
The inside of the dishwasher is wet	Condensation	The appliance is not faulty, it is normal for there to be condensation on the inside walls
Change in colour of the plastic parts inside the chamber	The colour of plastic parts inside the dishwasher can fade with use	This is normal and does not affect the effectiveness of the dishwasher
The salt and/or rinse aid light is on	No salt	Add salt
	No rinse aid	Add rinse aid
Detergent residues or dishes not perfectly clean	Dishes are preventing the cover of the detergent dispenser from opening completely	The dishes should not protrude from the basket
	The detergent dispenser cover is blocked by the tablet	The tablet should be inserted transversely, not vertically
	Tablets used in a short program; the detergent does not have time to dissolve	Use a powder detergent or a more intensive program
	Detergent stored in an open box in a damp environment. It has lost its effectiveness, aged or become lumpy	Replace detergent
	Dishes arranged incorrectly	Water cannot pass correctly if the dishes are arranged incorrectly. Take greater care when arranging the dishes.
Traces of rust on cutlery	Cutlery not oxidation resistant. Knife blades are particularly subject to this.	Use only stainless cutlery.

	Cutlery becomes oxidized even if washed together with other items that are subject to oxidation (pot handles, damaged knives, etc.)	Avoid washing parts that can become oxidized
	Too much salt in the washing water	Tighten the cap of the water softener container properly
The dishwasher does not start	The door does not close	Check the position of the door lock catch **(D)**. If necessary, raise it by adjusting the plastic screw **(V)** next to the catch
	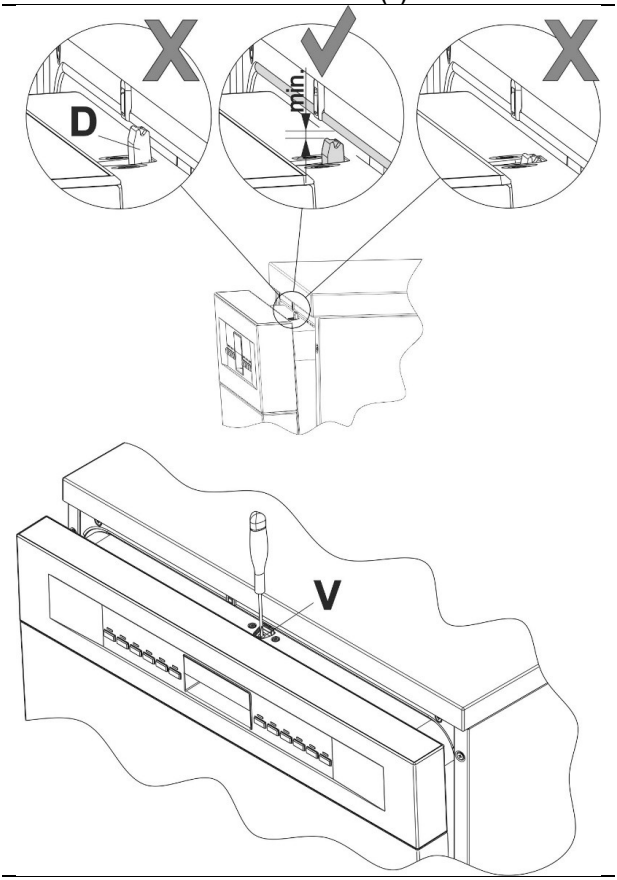	
	The door does not close	Check the condition of the door lock catch: - if it has not triggered (N), the door opens and closes normally

	- if it has triggered (S), close the door with force (without slamming it) until it rearms; then open and close the door again
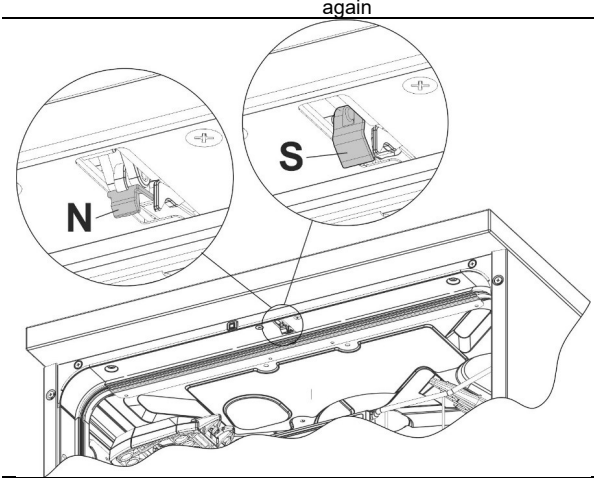	
Door does not close properly	Make sure that there are no obstacles that prevent it from closing (e.g. objects protruding from the baskets)
Failure	Contact technical assistance
No power	Check the power supply.
	Check the power cable
It is not clear if the spray arms are working	The spray arms start turning approximately 5 minutes after the dishwasher starts. This is normal during the washing cycle.
No water is taken in	Make sure that the water tap is open

Dishes not dry	No rinse aid	Add rinse aid
	A program has been used that does not involve a final drying cycle	See program table
	Water in dishes or pans	When loading the dishwasher, make sure that you place dishes and pans at an angle
	The dishes were taken out too soon	Wait at least 20 minutes after the end of the program
	Use of ecological rinse aids	Ecological products may be less effective than traditional products
	Plastic dishes	Plastic has a lower heat storage capacity and is therefore harder to dry
	The combined detergent used does not produce good drying results	Use a different combined detergent. Using traditional rinse aids improves drying.
Clouding of glassware	Glass not dishwasher safe	Only use glassware that is dishwasher safe. Check the water softener setting (reduce if necessary). Use a detergent that contains additives for protecting glass
Water marks on some items or on plastic dishes	The formation of drops on the plastic parts is inevitable; stains may therefore be visible after drying	Use a more intense program
		Arrange dishes at an angle so that the water can drain off easily
		Use a traditional rinse aid or increase the dosage
		Increase the water softener setting
Removable streaks on glasses, metal items and cutlery	Too much rinse aid	Reduce the amount of rinse aid
	No rinse aid or setting too low	Add rinse aid or increase supply
	Detergent not very effective	Packets of detergent should not be kept open for too long. The detergent loses effectiveness

Food residues on the dishes	Dishes too close together, baskets too full	There must always be enough space between the dishes to allow water jets to pass. Avoid contact points
	The spray arms do not rotate	Take care not to prevent the spray arms from rotating when loading the dishwasher
	Clogged spray arm nozzles	Clean the spray arms as indicated in the manual

	Dirty filters	Clean the filters as indicated in the manual
	Filters inserted incorrectly or not fastened in place	Check and correct
	Wash program unsuitable for the type of soil	Find the suitable washing program in the program table
	Combined detergent used with programs that are too short	Use a powder detergent or a more intensive program
	Not enough detergent (if you are using a powder detergent)	Increase the amount of detergent used
	Upper basket not horizontal	The left and right sides of the upper basket must be at the same level
White film in the chamber or on the door	The substances contained in the detergent has settled out	Use a dishwasher cleaner
		Wash the appliance by hand
		Change detergent
	Incorrect water hardness setting (too low or too high)	Adjust the water softener setting
		Change detergent
	Salt container cap not tightened (saline solution mixing with the wash water)	Tighten the salt container cap properly
	Combined detergent or bio/eco detergent not very effective	Adjust the water softener system
		Use separate products



If after following the above troubleshooting instructions the problem persists, call the nearest After-Sales Centre.
WARNING: any operations performed on the appliance by unauthorised persons are not covered by the warranty and shall be paid for by the user.

7. Troubleshooting

The dishwasher is capable of signalling a number of faults through the simultaneous illumination of several indicator lights, with the following meanings:

FAULT		DESCRIPTION
E1		**Acquastop failure (some models only)**
E2		**Safety level**
E3	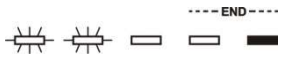	**Water heating fault**
E4		**Water temperature detection fault**
E5	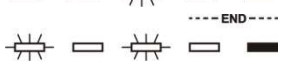	**Water intake fault**
E6	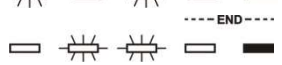	**Water drainage fault**
E7	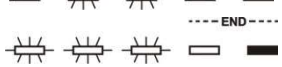	**Turbine flow-meter fault (some models only)**
E8	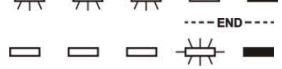	**Alternate washing system fault**
E9		**Water intake system fault**
E11	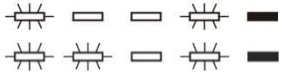	**Wash pump fault.**

Light off **Light on** **Light flashing**

If an alarm occurs, the machine stops the current program and indicates the fault.

- Alarms **E1 and E11** require you to contact the technical assistance service.
- Alarm **E7** is displayed at the end of the cycle, which is anyway completed, as it does not affect the operation of the dishwasher.

For all other alarms, proceed as follows: stop the current program, switch off the dishwasher. Switch on and program the dishwasher again to start the new wash cycle.



*If the malfunction persists, contact your authorised Service Centre and **provide it with the fault code**.*
The contact details of the Technical Assistance Department can be found on the warranty certificate and the website

The manufacturer reserves the right to make any changes deemed necessary for the improvement of its products without prior notice.