OVEN

GO250100 GO251100 GO250130 GO251130





GAGGENAU

You can find additional information and explanations online.
Scan the QR code on the title page.



Table of contents

INFORMATION FOR USE

1 Safety 2
2 Preventing material damage 5
3 Environmental protection and saving energy 6
4 Familiarising yourself with your appliance 6
5 Functions in the Home Connect app 14
6 Accessories 14
7 Before using for the first time 16
8 Basic operation 16
9 Timer functions 19
10 Long-term timer 20
11 Childproof lock 22
12 Searing function 22
13 Favourites 23
14 Programmes 23
15 Core temperature probe 26
16 Home Connect 28
17 Basic settings 31
18 Cleaning and servicing 36
19 Pyrolytic self-cleaning 38
20 Troubleshooting 40
21 Disposal 41
22 How it works 42
23 Information regarding Free and Open Source Software 45
24 Customer Service 45
25 Declaration of Conformity 46

26 INSTALLATION INSTRUCTIONS 47
26.1 General installation instructions 47

⚠ 1 Safety

Observe the following safety instructions.

1.1 Definition of the signal words

This is where you can find explanations for the safety signal words used in this manual.

⚠ WARNING
This indicates that death or serious injuries may occur as a result of non-observance of this warning.

ATTENTION
This indicates that damage to the appliance or other material damage may occur as a result of non-compliance with this warning.

Note: This alerts you to important information.

1.2 General information

- Read this instruction manual carefully.
- Keep the instruction manual and the product information safe for future reference or for the next owner.
- Do not connect the appliance if it has been damaged in transit.

1.3 Intended use

This appliance is designed only to be built into kitchen units. Read the special installation instructions.
Only a licensed professional may connect appliances without plugs. Damage caused by incorrect connection is not covered under the warranty.

Only use this appliance:
- To prepare meals and drinks.
- in private households and in enclosed spaces in a domestic environment.
- Up to an altitude of 4000 m above sea level.

1.4 Restriction on user group

This appliance may be used by children aged 8 or over and by people who have reduced physical, sensory or mental abilities or inadequate experience and/or knowledge, provided that they are supervised or have been instructed on how to use the appliance safely and have understood the resulting dangers.

Do not let children play with the appliance. Children must not perform cleaning or user maintenance unless they are at least 15 years old and are being supervised.
Keep children under the age of 8 years away from the appliance and power cable.

1.5 Safe use

Always place accessories in the cooking compartment the right way round.
→ *"Accessories", Page 14*

⚠ WARNING – Risk of fire!
Combustible objects that are left in the cooking compartment may catch fire.
- ▸ Never store combustible objects in the cooking compartment.
- ▸ If smoke is emitted, the appliance must be switched off or the plug must be pulled out and the door must be held closed in order to stifle any flames.

Loose food remnants, fat and meat juices may catch fire.
- ▸ Remove coarse dirt from the cooking compartment and from the accessories.

Opening the appliance door creates a draught. Greaseproof paper may come into contact with the heating element and catch fire.
- ▸ Never place greaseproof paper loosely over accessories when preheating the appliance and while cooking.
- ▸ Always cut greaseproof paper to size and use a plate or baking tin to hold it down.

⚠ WARNING – Risk of burns!
The appliance and its parts that can be touched become hot during use.
- ▸ Caution should be exercised here in order to avoid touching the cooking compartment.
- ▸ Young children under 8 years of age must be kept away from the appliance.

Accessories and cookware get very hot.
- ▸ Always use oven gloves to remove accessories or cookware from the cooking compartment.

The inside of the appliance door becomes very hot during operation.
- ▸ During or after operation of the appliance, only touch the appliance door at the surface intended for this on the side.
- ▸ Always open the appliance door as far as it will go.

When the cooking compartment is hot, any alcoholic vapours inside may catch fire. The appliance door may spring open. Hot steam and jets of flame may escape.
- ▸ Only use small quantities of drinks with a high alcohol content in food.
- ▸ Do not heat spirits (≥ 15% vol.) when undiluted (e.g. for marinating or pouring over food).
- ▸ Open the appliance door carefully.

The telescopic shelves become hot when the appliance is in use.
- ▸ Allow hot telescopic shelves to cool down before touching them.
- ▸ Only touch hot telescopic shelves with oven gloves.

⚠ WARNING – Risk of scalding!
Hot steam may escape when you open the appliance door. Steam may not be visible, depending on the temperature.
- ▸ Open the appliance door carefully.
- ▸ Keep children at a safe distance.

If there is water in the cooking compartment when it is hot, this may create hot steam.
- ▸ Never pour water into the cooking compartment when the cooking compartment is hot.

⚠ WARNING – Risk of injury!
Scratched glass in the appliance door may develop into a crack.
- ▸ Do not use any harsh or abrasive cleaners or sharp metal scrapers to clean the glass on the oven door, as they may scratch the surface.

The appliance and its parts that can be touched may have sharp edges.
- ▸ Take care when handling and cleaning them.
- ▸ If possible, wear protective gloves.

The hinges on the appliance door move when the door is opened and closed, which could trap your fingers.
- ▸ Keep your hands away from the hinges.

The light emitted by LED lights is very dazzling, and can damage the eyes (risk group 1).
- ▸ Do not look directly into the switched on LED lights for longer than 100 seconds.

⚠ WARNING – Risk of electric shock!
Improper repairs are dangerous.
- ▸ Repairs to the appliance should only be carried out by trained specialist staff.
- ▸ Only use genuine spare parts when repairing the appliance.
- ▸ If the power cord or the appliance power cable of this appliance is damaged, it must be replaced with a special power cord or special appliance power cable, which is

available from the manufacturer or its Customer Service.
- ▸ If the power cord of this appliance is damaged, it must be replaced by trained specialist staff.

If the insulation of the power cord is damaged, this is dangerous.
- ▸ Never let the power cord come into contact with hot appliance parts or heat sources.
- ▸ Never let the power cord come into contact with sharp points or edges.
- ▸ Never kink, crush or modify the power cord.

An ingress of moisture can cause an electric shock.
- ▸ Do not use steam- or high-pressure cleaners to clean the appliance.

If the appliance or the power cord is damaged, this is dangerous.
- ▸ Never operate a damaged appliance.
- ▸ If the glass of the lighting is damaged, switch off the appliance to avoid a possible electric shock.
- ▸ Never pull on the power cord to unplug the appliance. Always unplug the appliance at the mains.
- ▸ If the appliance or the power cord is damaged, immediately unplug the power cord or switch off the fuse in the fuse box.
- ▸ Call customer service. →*Page 45*

⚠ WARNING – Risk of suffocation!

Children may put packaging material over their heads or wrap themselves up in it and suffocate.
- ▸ Keep packaging material away from children.
- ▸ Do not allow children to play with packaging material.

Children may breathe in or swallow small parts, causing them to suffocate.
- ▸ Keep small parts away from children.
- ▸ Do not let children play with small parts.

1.6 Core temperature probe

Follow these safety instructions when using the core temperature probe.

⚠ WARNING – Risk of electric shock!

An incorrect core temperature probe may damage the insulation.
- ▸ Only use the core temperature probe that is suitable for this appliance.

⚠ WARNING – Risk of injury!

The core temperature probe is sharp.
- ▸ Handle the core temperature probe with care.

1.7 Cleaning function

⚠ WARNING – Risk of fire!

The outside of the appliance gets very hot when the cleaning function is in progress.
- ▸ Never hang combustible objects, e.g. tea towels, on the door handle.
- ▸ Leave the front of the appliance clear.
- ▸ Keep children away from the appliance.

If the door seal is damaged, a large amount of heat is generated around the door.
- ▸ Do not scrub or remove the seal.
- ▸ Never operate the appliance if the seal is damaged or missing.

Loose food remnants, fat and meat juices may catch fire.
- ▸ Remove coarse dirt from the cooking compartment and from the accessories.

⚠ WARNING – Risk of serious harm to health!

The appliance gets very hot when the cleaning function is in progress. The non-stick coating on baking trays and tins is destroyed and noxious gases are released.
- ▸ Never clean non-stick baking trays or baking tins using the cleaning function.
- ▸ Only clean enamelled accessories at the same time.

⚠ WARNING – Risk of harm to health!

The cleaning function heats up the cooking compartment to a very high temperature so that food left over from roasting, grilling and baking will burn off. This process releases vapours, which can irritate mucous membranes.
- ▸ Keep the kitchen well ventilated while the cleaning function is running.
- ▸ Do not remain in the room for long periods.
- ▸ Keep children and pets away.

⚠ WARNING – Risk of burns!

The cooking compartment gets very hot when the cleaning function is in progress.
- ▸ Never open the appliance door.
- ▸ Allow the appliance to cool down.
- ▸ Keep children at a safe distance.

⚠ The outside of the appliance gets very hot when the cleaning function is in progress.
- ▸ Never touch the appliance door.
- ▸ Allow the appliance to cool down.

▸ Keep children at a safe distance.

2 Preventing material damage

2.1 General information

ATTENTION
Objects on the cooking compartment floor will cause heat to build up. The baking and roasting times will no longer be correct and the enamel will be damaged.
- ▸ Do not place anything directly on the cooking compartment floor.
- ▸ Do not cover the cooking compartment floor with any sort of foil or greaseproof paper.

When the cooking compartment is hot, any water inside it will create steam. The change in temperature may cause damage.
- ▸ Never pour water into the cooking compartment when it is still hot.
- ▸ Never place cookware containing water on the cooking compartment floor.

The prolonged presence of moisture in the cooking compartment leads to corrosion.
- ▸ Do not keep moist food in the cooking compartment for a long time with the door closed.
- ▸ Do not store food in the cooking compartment.

Fruit juice dripping from the baking tray leaves stains that cannot be removed.
- ▸ When baking very juicy fruit flans, do not pack too much on the baking tray.
- ▸ If possible, use the deeper universal pan.

If aluminium foil comes into contact with the door pane, it could cause permanent discolouration.
- ▸ Do not allow aluminium foil in the cooking compartment to come into contact with the door pane.

Leaving the appliance to cool down with the door open will damage the front of neighbouring kitchen units over time.
- ▸ Always allow the cooking compartment to cool down with the door closed after cooking at high temperatures.
- ▸ Take care not to trap anything in the appliance door.
- ▸ Only leave the cooking compartment to dry with the door open if a lot of moisture was produced during operation.

If the seal is very dirty, the appliance door will no longer close properly during operation. This may damage the front of adjacent kitchen units.
- ▸ Keep the seal clean at all times.
- ▸ Never operate the appliance if the seal is damaged or missing.

Sitting or placing objects on the appliance door may damage it.
- ▸ Do not place, hang or support objects on the appliance door.
- ▸ Do not place cookware or accessories on the appliance door.

With certain models, accessories may scratch the door pane when closing the appliance door.
- ▸ Always push accessories fully into the cooking compartment.

Carrying the appliance by the appliance frame may cause it to bend. The appliance frame cannot support the weight of the appliance.

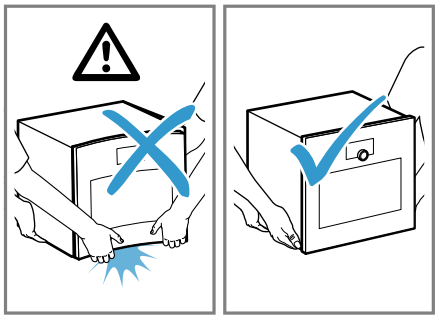

- ▸ Do not lift the appliance using the appliance frame.
- ▸ Always lift the appliance at the casing.

The heat during the pyrolytic self-cleaning function may damage certain accessories.
- ▸ Do not clean the wire rack, cast roaster, core temperature probe, baking stone or other accessories using the pyrolytic self-cleaning function.
- ▸ Only clean GAGGENAU baking trays and grill trays with the pyrolytic self-cleaning function.

Using cleaning agents before the pyrolytic self-cleaning cycle may damage the cooking compartment and the glass on the appliance door.
- ▸ Before the pyrolytic self-cleaning cycle, do not use any cleaning agents in the cooking compartment or on the inside of the appliance door.

The oven's wire rack is not suitable for the combi-steam oven.
Corrosion may form on the oven's wire rack.
- ▸ Do not use the oven's wire rack in the combi-steam oven.

2.2 Core temperature probe

⚠ **WARNING – Risk of electric shock!**
An incorrect core temperature probe may damage the insulation.
- ▸ Only use the core temperature probe that is suitable for this appliance.

ATTENTION
Temperatures above 250 °C damage the core temperature probe.
- ▸ Only use the core temperature probe in your appliance at a maximum temperature of 250 °C.
- ▸ Do not use the core temperature probe with the "Grill" type of heating.
- ▸ Before using the "Grill" type of heating, remove the core temperature probe from the cooking compartment.

You may damage the cable of the core temperature probe with the appliance door.
- ▸ Do not trap the cable of the core temperature probe in the appliance door.

The heat of the grilling surface may damage the core temperature probe.
- ▸ Ensure that the distance between the glass grilling surface and the core temperature probe and the cable of the core temperature probe is a few centi-

metres. In doing so, ensure that the meat can expand during the cooking process.

Aggressive cleaning agents may damage the core temperature probe.
- ▸ Do not clean the core temperature probe in the dishwasher.

3 Environmental protection and saving energy

3.1 Disposing of packaging

The packaging materials are environmentally compatible and can be recycled.
- ▸ Sort the individual components by type and dispose of them separately.

3.2 Saving energy

If you follow these instructions, your appliance will use less power.

When cooking multiple dishes, do so in succession or in parallel.
- ✔ The cooking compartment is heated after cooking the first dish. This reduces the heating-up time for the following dishes.

If the cooking time is relatively long, you can switch the appliance off 10 minutes before the cooking time ends.
- ✔ There will be enough residual heat to finish cooking the dish.

When operating with the "Moist baking", "Hot air plus" and "Hot air eco" type of heating, you can bake on several levels at the same time.
- ✔ This will save energy.

Use dark-coloured or black-coated baking tins.
- ✔ These types of baking tin absorb the heat particularly well.

Open the appliance door as little as possible during operation.
- ✔ This maintains the temperature in the cooking compartment and eliminates the need for the appliance to reheat.

4 Familiarising yourself with your appliance

4.1 Appliance

You can find an overview of the parts of your appliance here.

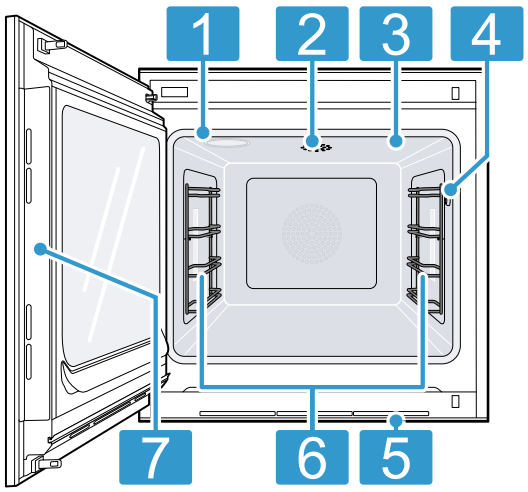

1	Door seal
2	Catalyser heating
3	Grilling surface
4	Connection socket for core temperature probe → *Page 26*
5	Ventilation slots
6	Interior lighting
7	Intended surface for opening the door

4.2 Cooking compartment

The cooking compartment has 4 shelf levels. Count the shelf levels from the bottom up.

⚠ **WARNING – Risk of burns!**
The inside of the appliance door becomes very hot during operation.
- ▸ During or after operation of the appliance, only touch the appliance door at the surface intended for this on the side.
- ▸ Always open the appliance door as far as it will go.

ATTENTION
Objects on the cooking compartment floor will cause heat to build up. The baking and roasting times will no longer be correct and the enamel will be damaged.
- ▸ Do not place anything directly on the cooking compartment floor.
- ▸ Do not cover the cooking compartment floor with any sort of foil or greaseproof paper.

The accessories may tip.
- ▸ Do not push the accessories between the shelf positions.

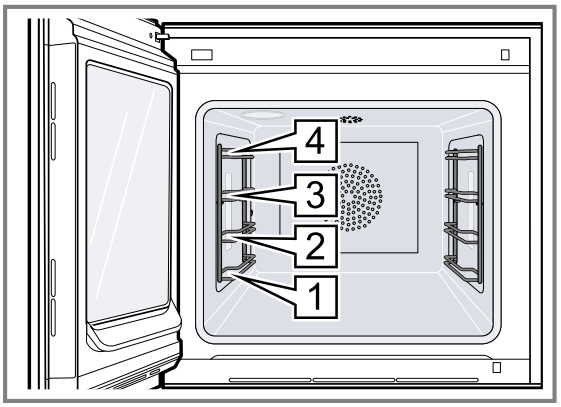

Shelf level 4 is not suitable for cooking.

4.3 Interior lighting

When you open the appliance door, the interior lighting switches on. If the appliance door remains open for longer than 3 minutes, the appliances switches the interior lighting off.

⚠ **WARNING – Risk of injury!**
The light emitted by LED lights is very dazzling, and can damage the eyes (risk group 1).
- ▸ Do not look directly into the switched on LED lights for longer than 100 seconds.

You can also switch on the interior lighting when the appliance is in low power mode.
After approx. 20 minutes, the appliance switches the interior lighting off.
When you switch on the appliance, the appliance switches the interior lighting on.
→ *"Switching the interior lighting on or off", Page 18*
In most operating modes, the appliance keeps the interior lighting switched on.
You can specify whether the appliance will switch the interior lighting on during operation in the basic settings →*Page 31*. If you select the "Manual" setting in the basic settings, the appliance does not switch on the interior lighting automatically but you can switch on the interior lighting when required. After approx. 20 seconds, the appliance switches the interior lighting off.

4.4 Control elements

You can use the control panel to configure all functions of your appliance and to obtain information about the operating status.
On certain models, specific details may differ from those pictured.

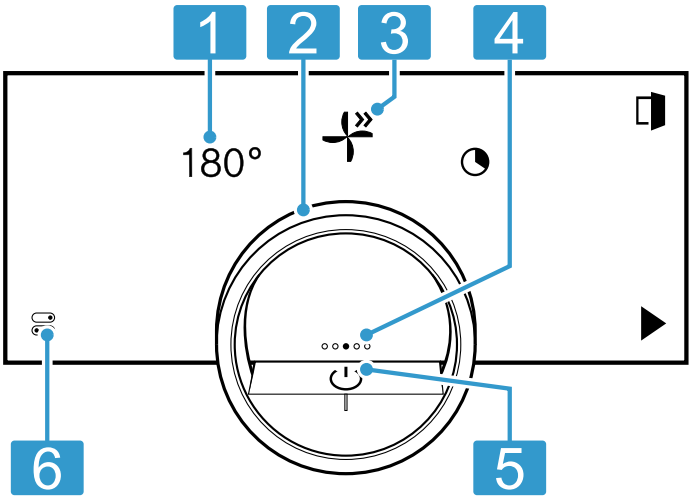

1	Symbols	Show settings and start or end functions.
2	Control ring	Use the control ring to change the selection.
3	12 o'clock position	The 12 o'clock position shows the value that is currently selected for a function, which you can change using the control ring. If required, press on another function, e.g. on the temperature or cooking time, to position this at the 12 o'clock position.
4	Position indicator	The filled point on the display in the middle of the control ring shows the current horizontal navigation position between the appliance displays.
5	On/Off button	Switch the appliance on and off.
6	Status bar & Control centre	The status line shows the current status of functions or appliance components, e.g.: ▪ Home Connect connection status ▪ Childproof lock Press ⊟ to open the control centre →*Page 10*.

Control ring

Operation using the control ring is only possible when the appliance is switched on. You can use the control ring to navigate through the ring menus or the list menus and select settings.

When you touch the control ring, the display shows a ring in orange behind the control ring.

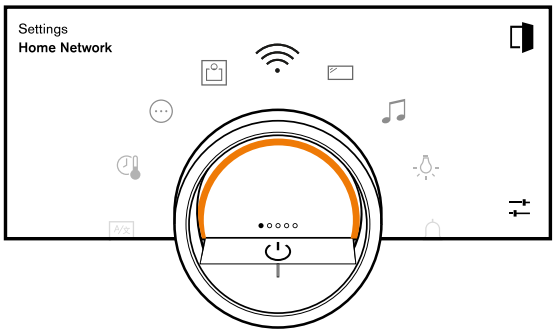

While operating the appliance, you can only use the control ring if you first select a function on the display.

Turn	Navigate in ring menus and list menus: ▪ Turn the control ring to the right to increase the values. ▪ Turn the control ring to the left to decrease the values. ▪ Turn the control ring to the right or left quickly to change the values in larger increments.

You can set how the control ring behaves in the basic settings →*Page 31*. In the "Standard" setting, press on the required function on the display and use the control ring to change the value of the function.
In the "Quick selection" setting, use the control ring, which is at the 12 o'clock position, to directly change the values for the function.

Process visualisation

For process visualisation, the appliance shows a section of a circle in orange behind the control ring.

The appliance shows the section of a circle in orange under the following conditions:
- A cooking time is set.
- A core temperature is set for the core temperature probe.

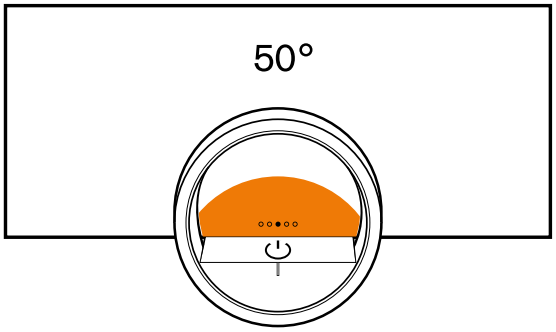

The section of the circle in orange becomes larger, the longer the timer runs or the closer the core temperature of the food approaches the set core temperature.
If no cooking time and no core temperature are set, the section of the circle pulsates in orange.

Display

The display shows the selected settings and setting options, as well as messages about the appliance's operating status.

Press	Selects or confirms the procedure or function
Press and hold	Displays additional information
Swipe horizontally	Navigates between appliance displays For example, in the "Manual" appliance display, swipe to the left or right **Note:** You can only use the function if you are in an appliance display →*Page 10* and no programme is running.

Note: If no display language is available in your national language, select a display language that is available, e.g. English.

Symbols

Use the symbols to start or stop functions, or to navigate in the appliance menu.

Operation

Symbol	Function
	Switching the appliance on or off at the control ring
	Opening the appliance door →*Page 17*
	Opening the control centre →*Page 18*
	Edit settings
	Call up additional information →*Page 18*
	Saving a favourite → *"Favourites", Page 23*
	Editing a favourite
	Deleting a favourite
	Calling up tips for programmes →*Page 23*
	Start
	Pause or stop
	Switch to the next step
	Switch to the previous step
	Back or accept settings
	Continue
	Confirm
	Delete
	Cancel
	Turning on the grill
	Switching between the display for the preferred types of heating and the display of all available types of heating → *"Basic settings", Page 31*

Symbol	Function
	Start →*Page 22* the searing function[1] or stop it early

Timer functions

Symbol	Function
	Calling up the timer menu →*Page 19*
	Call up the long-term timer →*Page 20*
	Deleting the heating cycle from the long-term timer →*Page 22*
	Delaying the cooking time end →*Page 20*
	Reset the delay of the cooking time end → *"Resetting the delay of the cooking time end", Page 20*

Cleaning and servicing

Symbol	Function
	Pyrolytic self-cleaning →*Page 38*

Operation in the control center

Symbol	Function
	Opening the appliance door automatically after the cooking process →*Page 18*
	Activating the childproof lock →*Page 22*
	Switching the interior lighting on or off →*Page 18*
	Start functions with the Home Connect app via manual "Remote start" → *"Starting functions with the Home Connect app via manual 'Remote start'", Page 29*
	Home Connect Call up settings → *"Home ConnectSettings", Page 29*

Status

Symbol	Function
	Remote start →*Page 29*
	Core temperature sensor is inserted → *"Core temperature probe", Page 26*
	Core temperature probe is missing
	Status display for the heating process
	Display of a cooling process
	The appliance is in demo mode →*Page 41*

Status in the control centre

Symbol	Function
	Connection to the router: Strong → *"Home Connect", Page 28*
	Connection to the router: Ok → *"Home Connect", Page 28*
	Connection to the router: Weak → *"Home Connect", Page 28*
	No connection to the router. → *"Home Connect", Page 28*
	Appliance connected to the router. No connection to the Home Connect server. → *"Home Connect", Page 28*
	Software update status

[1] The function is not currently available.

Appliance displays

You can find an overview of the appliance displays here.

Appliance displays	Use	Position indicator
Settings	▪ Adjusting the basic settings →*Page 31* ▪ Home Connect Adjusting the settings →*Page 28*	●○○○○
Modes & Service	▪ Starting the pyrolytic self-cleaning function →*Page 38* ▪ Starting the quick guide →*Page 18*	○●○○○
Manual operation	Setting the temperature, type of heating and timer function	○○●○○
Favourites	Calling up favourites →*Page 23*	○○○●○
Programmes	Calling up automatic programmes and setting recommendations →*Page 23*	○○○○●

Tip: In the basic settings →*Page 31*, you can set which appliance menu your appliance starts in.

Colours

The different colours are used to guide the user in the relevant setting situations.

red	▪ Error messages for which you may need the help of customer service.
orange	▪ Information that you must observe so that you can continue to use your appliance ▪ Symbols for starting and stopping
White	▪ Information ▪ Additional information

Appearance

Depending on the situation, the appearance of symbols, values or the entire display changes.

Zooming in ring menus and list menus	When you use the control ring to select a list entry in a list menu, the display enlarges this list entry and displays it as underlined. When you use the control ring to select a value in a ring menu, the display shows this value enlarged in the 12 o'clock position.
Zoom at end of cooking or core temperature probe	A few minutes before the cooking process ends, the appliance shows the remaining cooking time enlarged in the centre of the display. As soon as the current core temperature is just a few degrees below the set value, the display shows the current core temperature enlarged.
	All other displays are hidden.
Pared-down display	If the appliance does not detect a user in the immediate vicinity, the appliance reduces the amount of information shown on the display and only the most important information remains. This function is preset. You can change the setting in the basic settings →*Page 31*.

Control centre

The control centre ⊟ provides you with access to functions that are only visible in the status bar via symbols. You can activate or deactivate functions in the control centre.

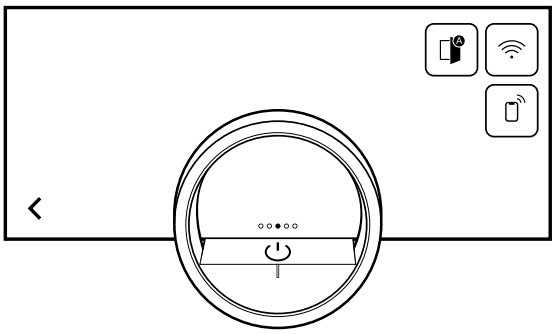

On the left-hand side, the display shows the symbols and texts with information on the current status of the appliance. On the right-hand side, the display shows the touch fields of the control centre.

4.5 Types of heating

This is where you will find an overview of the types of heating. You will find recommendations for using the types of heating.

Symbols	Function/type of heating	Temperature/setting	Application
	Hot air plus	50-300 °C	The heat that is generated on the back panel of the oven is combined with top and bottom heat and is distributed quickly and optimally by the fan. For baking and cooking on one or more levels. For moist cakes, biscuits, bakes, gratins and meat.
	Hot air eco [1]	50-250 °C	Energy-saving mode in which heat is generated on the back panel of the cooking compartment and is distributed quickly and evenly by the fan. Convenient functions such as interior lighting remain switched off and the temperature is only displayed during the heating phase. For baking on one level. For cakes, meat, bakes. No preheating is required.
	Moist baking	50-250 °C	The heat is distributed gently and the inherent moisture of the food is retained in the cooking compartment to prevent it from drying out. The interior lighting remains switched off. For baking on one or more levels. For dry cakes, biscuits and gratins.
	Top + bottom heat	50-300 °C	Constant heat from above and below creates an ideal baking area and preserves the moisture in the food. Only suitable for baking on one level. For cakes, tarts, quiches.
	Top heat	50-300 °C	Constant heat, targeted from above. For meringue toppings on fruit cakes.
	Bottom heat	50-300 °C	Constant heat, targeted from below. For cooking in a bain-marie, boiling down or as additional baking time for moist fruit bases and quiches.
	Hot air + bottom heat	50-300 °C	The heat from the back panel of the oven is distributed quickly and evenly by the fan. Heat is also added from below. For moist cakes, fruit bases, cheesecakes.
	Grill + circulated air	50-300 °C	Extremely intensive heat from above, which is distributed quickly and evenly by the fan. Guarantees that a crust is formed with simultaneous all-round heating. For meat, poultry, fish, vegetable skewers. No preheating is required.

[1] Type of heating used to determine the energy efficiency class in accordance with EN60350-1.

Symbols	Function/type of heating	Temperature/setting	Application
	Grill	Low, medium, high	Extremely intensive heat from above. Ideal for grilling and gratinating. For chicken legs (grill setting 1), vegetables (grill setting 2), strips of bacon and toast (grill setting 3). Wait 5 minutes before inserting the grill tray.
	Baking stone function	50-300 °C	Optimal heating of the baking stone with extra-strong, targeted bottom heat. For crispy baked pizza, tarte flambée, bread and bread rolls. It can only be used in conjunction with the GAGGENAU baking stone (special accessory).
	Roaster function	50-220 °C	Optimal heating of the roaster with bottom heat. For roasts, stews and casseroles. It can only be used for the Gaggenau roaster and in conjunction with the pull-out system [1] (special accessory).
	Air frying	50-300 °C	Extra-fast heat circulation in which the moisture is actively extracted from the cooking compartment. For extremely crispy results with little additional fat. For potatoes, poultry, meat, vegetables. Only in conjunction with the Gaggenau baking tray for hot-air frying (optional accessory).
	Dehydrating [2]	30-80 °C	For drying thin slices of fruit or vegetables or herbs. When heat is circulating, moisture is actively extracted from the cooking compartment. No preheating is required.
	Dough proving [2]	30-50 °C	Optimal temperature range for proving dough batches and pieces of dough. For yeast and sourdough. No preheating is required.
	Defrosting [2]	40-60 °C	Optimal temperature range for gently defrosting frozen food. For vegetables, fruit, cakes. No preheating is required.

4.6 Low power mode display

The appliance has different displays in low power mode. The displays depend on whether or not the appliance detects a user.
On the display without user detection, the appliance is switched off and the display is black. The appliance switches to low power mode without user detection if, when the appliance is switched on, you do not implement any settings for approx. 20 minutes or approx. 20 minutes after the appliance has completed a heating process.
If the proximity sensor detects a user or if you touch the control ring or press on the display, the appliance switches to low power mode with user detection.

In low power mode with user detection, the display shows the door opening symbol and the status bar. In the basic settings →*Page 31*, you can select whether the display also shows the GAGGENAU logo.
If the appliance is connected to the Home Connect app, the display shows .
→ *"Home Connect", Page 28*
The user detection distance depends on the selected basic settings.

[1] The function is not currently available.
[2] Do not preheat the appliance.

In low power mode with user detection, the display brightness is reduced. The brightness of the display depends on the viewing angle.

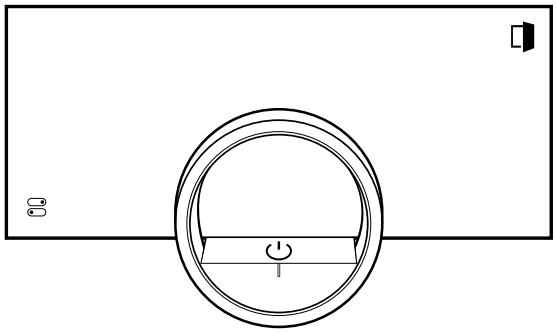

4.7 Additional information

If required, you can display additional information.
When you press on ⓘ, the display shows additional information about the current function.
When you press and hold certain symbols or values, the display shows additional information about the current function. Additional information is available for all symbols that are arranged around the control ring, e.g. information about the set type of heating or current cooking compartment temperature.
In the basic settings →*Page 31*, you can activate or deactivate the "Info-i" function.
The appliance also occasionally displays important information about safety and the operating status automatically. These messages disappear automatically after a few seconds, or when you press ✓ to confirm the message.
For messages about Home Connect, the appliance also displays the Home Connect status.
→ *"Home Connect", Page 28*

4.8 Pop-up information

Pop-up messages contain explanations about current functions.
In the basic settings →*Page 31*, you can activate or deactivate the "Pop-up hints" function.

4.9 Quick guides

Your appliance comes with a quick guide to help you with various topics.

4.10 Cooling fan

The cooling fan switches on when the appliance is in operation. The hot air escapes beneath the door.
After removing your food from the appliance, keep the door closed until the appliance has cooled down. The appliance door should not be left half open as this may damage adjacent kitchen units. The cooling fan continues running for a certain period of time after the appliance has stopped heating and then it switches itself off automatically.
Do not cover the ventilation slots. Otherwise, the appliance will overheat.

4.11 Automatic switch-off

For your protection, the appliance is equipped with an automatic switch-off function. The appliance switches off the heating process after 12 hours if you do not operate the appliance or programme a cooking time during this time. The display shows a message.
If you set a cooking time, you can use the appliance for longer.
If you set a cooking time, you can operate the appliance in the "Dehydrating" type of heating for a maximum of 72 hours, and in all other types of heating for a maximum of 24 hours.
When programming with the long-term timer →*Page 20* function, the appliance switches off after up to 74 hours.

4.12 Wipe protection

Your appliance detects if you would like to clean the display or navigate between the appliance displays. The appliance locks the operation via the display and the control ring for a short time.
Press the display to return to the operation.

4.13 Proximity sensor

Your appliance detects whether you are in front of the appliance or moving towards it. Your appliance disregards if you are passing in front of it.
If you do not remain in the detection zone for the appliance when it is switched on, the appliance reduces the display to what is essential.

Note: You can set the distance at which the appliance can detect you in the basic settings. To ensure that the proximity sensor optimally detects the user, set the installation height of the appliance's upper edge in the basic settings →*Page 31*.

4.14 Door lock

The "Door lock" function prevents the appliance door from being opened accidentally. This is particularly useful when installing the appliance under the worktop.
In the basic settings →*Page 31*, you can activate or deactivate the "Door lock" function. When you activate the function and press ⍞, the display shows a slide control instead of the ⍞ symbol.
→ *"Opening the appliance door", Page 17*

4.15 Catalyser heating

The catalyser heating supports more effective elimination of odours.
In the basic settings →*Page 31*, you can switch the catalyser heating on or off.
When you switch on the catalyser heating, this reduces odour development.
To save energy, switch the catalyser heating off.

5 Functions in the Home Connect app

The Home Connect app offers a range of functions and benefits.

- Monitor the cooking process, e.g. the remaining cooking time or the current core temperature.
- Start or stop a type of heating or program, or change the settings.
- Run important updates to the appliance software.
- Find the optimum settings or the optimum program for your recipe with the Oven Assistant function.
- When using the core temperature probe, obtain an estimate of the remaining cooking time.
- Change the basic settings for the appliance.
- Operate the main functions via Voice Control (using Alexa or Google Home).
- Find the appliance information and instructions.
- Find new recipes.

6 Accessories

Use original accessories. These have been made especially for your appliance.

Note: Accessories may become deformed if they get hot. Deformation has no effect on function. As the accessory cools down, it will regain its original shape.

The accessories supplied may differ depending on the appliance model.

Accessories		Use
Baking tray, enamelled	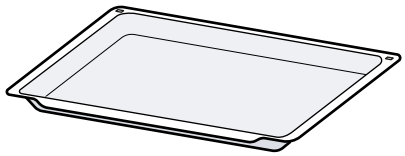	▪ Tray bakes ▪ Small baked items
Wire rack	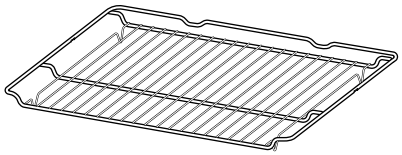	▪ Tableware ▪ Cake tins ▪ Ovenproof dishes ▪ Roasting
Grill tray, enamelled	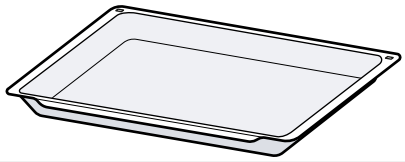	▪ Tray bakes ▪ Frying
Core temperature probe	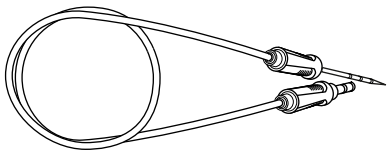	Core temperature probe →*Page 26* for the highly precise cooking of: ▪ Meat ▪ Fish ▪ Poultry ▪ Bread

6.1 Other accessories

You can purchase other accessories from our customer service, specialist retailers or online.
You will find a comprehensive range of products for your appliance in our brochures and online:
www.gaggenau.com
Accessories are appliance-specific. When purchasing accessories, always quote the exact product number (E no.) of your appliance.
You can find out which accessories are available for your appliance in our online shop or from our customer service.

Other accessories	Order number
Baking tray, enamelled, 30 mm deep	BA026116
Grill tray, enamelled, 38 mm deep	BA026117

Other accessories	Order number
Wire rack	BA036106
Glass tray	BA046118
Baking tray for hot-air frying, perforated, enamelled	BA020110
Fully extendable telescopic pull-out rack	BA016106
Cast aluminium roaster GN2/3, height 165 mm, non-stick	GN340231
Adapter for roaster	GN010330
Baking stone, baking stone supports and pizza paddle	BA056134
Pizza paddle	BS020003
Core temperature probe	BA010050

Other accessories	Order number
Manual door opening aid	10044743

6.2 Sliding accessories into the cooking compartment

The accessories have a locking function. The accessories must always be inserted into the cooking compartment the right way round for the tilt protection to work properly.

ATTENTION
The accessories may tip.
- Do not push the accessories between the shelf positions.

1. When inserting the wire rack, ensure that the catch tappets a are facing downwards.

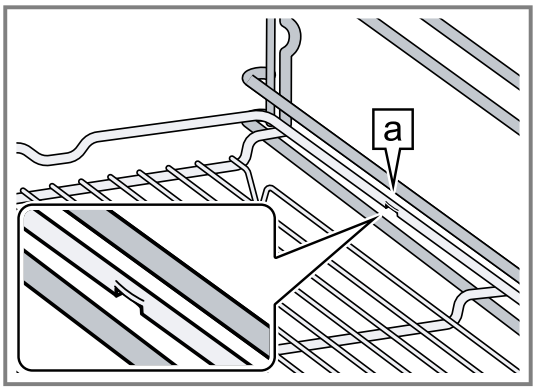

The catch tappets are located on the left and right of the wire rack at the centre on the outside.
2. Ensure that the safety bar a on the wire rack is located at the rear and is facing upwards.

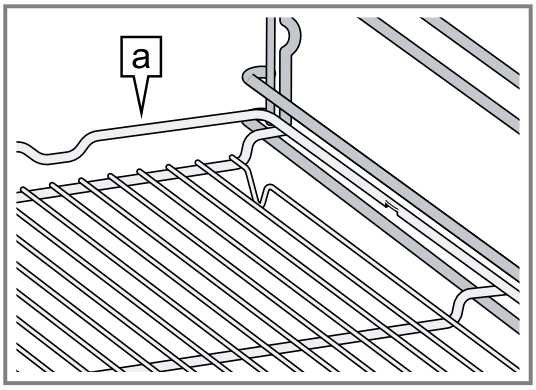

Sliding the baking tray and wire rack together into the cooking compartment

1. Correctly position the wire rack on the baking tray.
   - Ensure that the safety bracket on the wire rack is located at the rear, is facing upwards and is located above the openings in the baking tray.

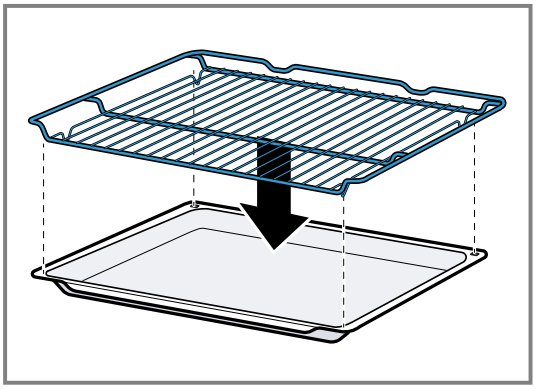

2. Slide the baking tray and wire rack together into the cooking compartment.

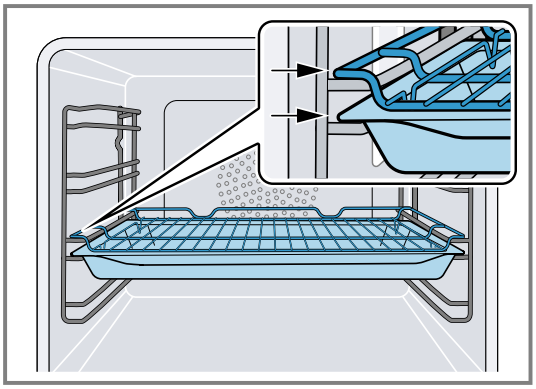

The wire rack slides over the current rack.

Sliding the grill tray and wire rack together into the cooking compartment

1. Correctly position the wire rack on the grill tray.
   - Ensure that the safety bracket on the wire rack is located at the rear, is facing upwards and is located above the openings in the grill tray.

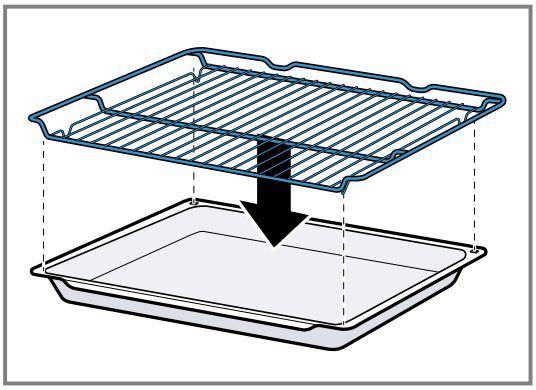

2. Slide the grill tray and wire rack together into the cooking compartment.

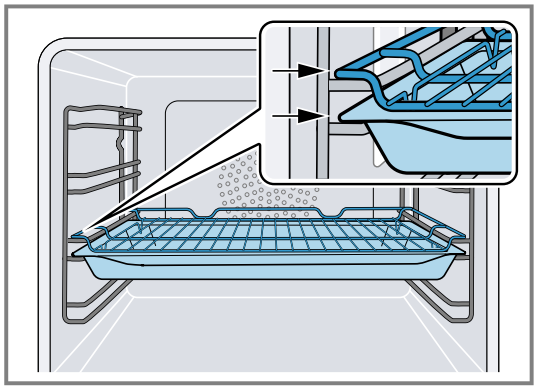

The wire rack slides over the current rack.

7 Before using for the first time

Configure the settings for initial start-up. Clean the appliance and accessories.

7.1 Initial start-up

Implement the settings for initial use before using your appliance.
First read the information under safety →*Page 2*.
The appliance must be installed and connected.
After connecting to the power supply, the appliance shows the "Initialisation" display.
The appliance shows the "Initialisation" display when it is first switched on after being connected to the power supply, if the initial start-up has not been completed successfully or the appliance has been restored to the factory settings.

Implement the following settings:
- Setting the language
- Activating Home Connect
- Set the temperature unit
- Set the weight unit
- Setting the time format
- Setting the time

You can retroactively change all of the settings in the basic settings →*Page 31*.
Follow the instructions in the display. The display guides you through the initial settings.

Setting the language and implementing the remaining settings

1. Press ⌧.
✔ The display shows the preset language.
2. Use the control ring to select the required display language.
3. Press ✓ to confirm.
4. Press →.
5. Implement the remaining settings.
✔ The display shows the appliance display that is selected in the basic settings →*Page 31* as the start screen.

Cleaning the door pane

Note: To ensure tightness, the door seal is lubricated at the factory. Residue may remain on the door pane.

▸ Before using for the first time, clean the door pane with glass cleaner and a window cloth or a microfibre cloth.
Do not use a glass scraper.

Cleaning accessories

▸ Before first use, clean the accessories thoroughly using hot soapy water and a soft cloth.

Heating up the appliance

1. Ensure that there is no leftover packaging in the cooking compartment.
2. Remove any accessories from the appliance.
3. To eliminate the new-appliance smell, heat up the empty appliance with the door closed.
The ideal setting for heating is 200 °C in the "Hot air plus" type of heating for one hour.
4. Clean the appliance interior.

8 Basic operation

8.1 Switching on the appliance

1. To exit low power mode →*Page 12*, press ⏻ on the appliance's control ring or in the Home Connect app.
✔ The display shows a temperature, a symbol for the type of heating and a symbol for the timer.
✔ The appliance switches the interior lighting on.
✔ ⏻ lights up orange.
2. Set the temperature, type of heating and cooking time that you require.

Tip: In the basic settings →*Page 31*, you can specify which appliance display appears on the display after the appliance is switched on and whether you want the interior lighting to switch on.

Note: If you do not implement any settings for an extended period, the display shows the appliance display that

is selected in the basic settings →*Page 31* as the start screen, and then the low power mode display.

8.2 Opening the appliance door

⚠ **WARNING – Risk of burns!**
The inside of the appliance door becomes very hot during operation.
- ▸ During or after operation of the appliance, only touch the appliance door at the surface intended for this on the side.
- ▸ Always open the appliance door as far as it will go.

⚠ **WARNING – Risk of scalding!**
Hot steam may escape when you open the appliance door. Steam may not be visible, depending on the temperature.
- ▸ Open the appliance door carefully.
- ▸ Keep children at a safe distance.

1. Press ⍞.
   - ▸ If the "Door lock" function is activated in the basic settings →*Page 31*, move the slide control to the other end.
- ✔ The appliance door opens automatically.
2. Only touch the appliance door at the designated area a and open it fully.

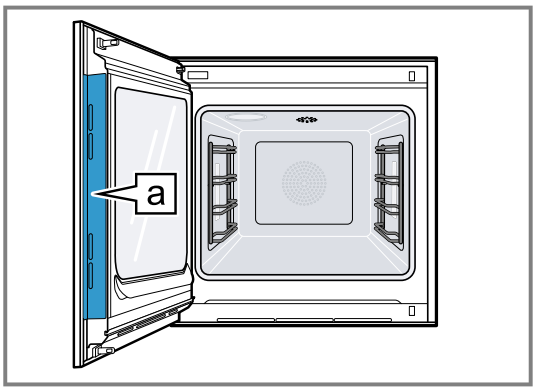

Tip: In the control centre, you can set that the appliance door opens automatically after the current cooking process.
→ *"Opening the appliance door automatically after the cooking process", Page 18*

8.3 Changing the type of heating

Note: You can change the type of heating during operation.

1. Press the current symbol for the type of heating.
2. Use the control ring to select the required type of heating.
3. Press on the selected type of heating or <, or wait a few seconds.
- ✔ The display shows the selected type of heating and the default temperature.
- ✔ If you have previously used the type of heating, the display shows the last temperature that you used.
4. If required, change the temperature. →*Page 17*
5. If the display shows a message window, follow the instructions in the message window.
6. Press ▸ to start the operation.

8.4 Changing the temperature

Note: You can change the temperature during operation.

Requirement: The type of heating is selected.
→ *"Changing the type of heating", Page 17*
1. Press the temperature displayed.
2. Use the control ring to select the desired temperature.
- ✔ The display shows the temperatures that are available for the selected type of heating.
3. To change the previously stored appliance display, press the required temperature or <.
   If you do not use the appliance for an extended period, the display returns to the previously stored appliance display.
- ✔ The display shows the selected temperature.

Note: Once the operation has started, the display shows a progress bar below the selected temperature if the changed temperature is more than 20 °C higher than the previous temperature.

8.5 Displaying the current interior temperature

- ▸ Press and hold the set temperature.
- ✔ The display shows the current interior temperature.

Note: During continuous operation after heating up, slight temperature fluctuations are normal.

8.6 Switching on the grill and changing the grill setting

Note: The core temperature probe cannot be used in combination with the "Grill" type of heating.

1. Press ⍞.
2. Use the control ring to select the "Grill" type of heating.
3. Press ⍞.
- ✔ ⍞ lights up.
- ✔ The display shows the symbol for the grill setting instead of the temperature.
4. Press ⍞.
5. Turn the control ring to select the grill setting.
6. Press <.
7. If required, set the cooking time →*Page 19*.
8. Press ▸ to start the operation.
- ✔ The display shows the type of heating, the grill setting and the cooking time or cooking time end.

8.7 Add grill

You can brown or gratinate your food using the grill.
The "Add grill" function is available for most types of heating, except for "Grill", "Grill + circulated air", "Roaster function", "Dehydrating", "Dough proving" and "Defrosting".
The "Add grill" function is not available until a temperature of 150 °C is reached.
After approx. 3 minutes, the appliance switches the grill off. If required, you can switch the grill on again.

Turning on the grill

ATTENTION
Temperatures above 250 °C damage the core temperature probe.
- ▸ If you use the core temperature probe, never place the food on the top shelf level.

1. Use the control ring to select the required type of heating and start the operation.
   The "Add grill" function is not available for all types of heating.
2. Press ⊔⊔⊔.
- ✔ ⊔⊔⊔ lights up.
- ✔ The appliance switches the grill off for approx. 3 minutes.

Deactivating the grill

Requirement: ⊔⊔⊔ lights up orange.
- ▸ Press ⊔⊔⊔.
- ✔ ⊔⊔⊔ lights up white.
- ✔ The grill is deactivated.

8.8 Opening the appliance door automatically after the cooking process

The "automatic door opening" function at the end of the cooking process is only valid for the current cooking process.

⚠ **WARNING – Risk of burns!**
The appliance and its parts that can be touched become hot during use.
- ▸ Young children under 8 years of age must be kept away from the appliance.
- ▸ Ensure that young children are not in the vicinity of the appliance when the appliance door opens automatically.

Note: Use the "automatic door opening" function at the end of the cooking process only if required to prevent the food from being overcooked or burning.
In order to reduce the amount of moisture deposited on the unit fronts, open the appliance door fully after the cooking time has elapsed if possible.

1. Press ⊜.
2. Press ⊡.
- ✔ The display shows ⊡.
- ✔ The appliance opens the appliance door automatically after the current cooking process with a set cooking time end or set core temperature.

Note: The appliance door also opens when the childproof lock →*Page 22* is activated or the door lock →*Page 13* is activated.

8.9 Deactivating the automatic appliance door opening

1. Press ⊜.
2. Press ⊡.
- ✔ The display shows ⊡.
- ✔ The automatic appliance door opening after the cooking process is deactivated.

8.10 Interrupting and continuing an operation

1. To interrupt the operation, press ■.
2. To continue the operation, press ▶.

8.11 Opening and closing the control centre

1. Press ⊜ to open the control centre.
- ✔ The appliance shows a description above the functions currently active.
2. To activate or deactivate a function as required, press the symbol for the function.
3. Press < to close the control centre.
- ✔ A pop-up message →*Page 13* tells you if a function has been activated.

8.12 Switching the interior lighting on or off

1. Press ⊜.
2. Press ☼.

8.13 Switching off the appliance

- ▸ Press ⏻ on the control ring.
- ✔ The appliance switches to low power mode.

8.14 Switching on the appliance after automatic switch-off

Requirement: After prolonged operation, the Automatic switch-off →*Page 13* switches off the appliance.
- ▸ Press ⏻ on the control ring.

8.15 Displaying information

- ▸ Press ⓘ.
- ✔ The appliance displays information about the selected function.
  → *"Additional information", Page 13*

8.16 Displaying appliance information

1. Swipe repeatedly from left to right until the display shows "Modes & Service".
- ✔ The display shows the available functions in a list menu.
2. Use the control ring to select the "Appliance information" function.
3. Press "Appliance information".
- ✔ The display shows the appliance information, e.g. the E-number and the serial number.
4. Press < to exit the display.

8.17 Using quick guides

1. Select the "Modes & Service" appliance display.
   → *"Appliance displays", Page 10*
2. Use the control ring to select "Quick guide", then release the control ring.
3. Select the required quick guide and view it.

9 Timer functions

Your appliance has different timer functions, with which you can control its operation.

9.1 Overview of the timer functions

Use ◔ to select the different timer functions.

Timer function	Use
◔	Cooking time
→I	Cooking time end

A cooking time or cooking time end can only be set in combination with a type of heating.
The "Cooking time" and "Core temperature probe" functions are not available at the same time.

9.2 Calling up the timer menu

- ▸ Press ◔.
- ✔ The display shows "h" and "min" for hours and minutes.
- ✔ The display shows the display for the minutes enlarged in the 12 o'clock position.

9.3 Exiting the timer menu

- ▸ Press < or press on the selected cooking time to switch to the previously stored appliance display.
- ✔ The timer menu is closed.

9.4 Cooking time

When you set the cooking time for your food, the appliance automatically switches off after this time. The maximum possible cooking time depends on the set type of heating.
For most types of heating, you can set a cooking time of 1 minute up to 24 hours.
For the "Dehydrating" type of heating, the maximum cooking time is 72 hours.
You can change the type of heating and temperature while the cooking time counts down.

Setting the cooking time

Requirement: No core temperature is set. You cannot use the "Cooking time" and "Core temperature probe" functions at the same time.

1. Place the food in the cooking compartment.
2. Press ◔.
- ✔ The display shows h : min for hours and minutes.
3. Press the required value and use the control ring to change the value.
   - ▸ Turn the control ring slowly to change the value in smaller increments.
   - ▸ Turn the control ring quickly to change the value in greater increments.

   The maximum possible cooking time depends on the type of heating.
- ✔ The appliance automatically calculates the time for the cooking time end.
4. Press < or press on the selected cooking time to switch to the previously stored appliance display.
   If you do not use the appliance for an extended period, the appliance saves the settings and the display returns to the previously stored appliance display.
- ✔ If the appliance is in operation, the appliance shows the temperature, the operating mode, and the remaining cooking time.
- ✔ 3 minutes before the end of the cooking time, the display zooms in on the remaining cooking time.
- ✔ After the cooking time has elapsed, the display shows 00:00 and a signal tone sounds.
5. Turn the control ring or open the appliance door.
   The appliance door opens automatically if you have activated this function.
   → *"Opening the appliance door automatically after the cooking process", Page 18*
- ✔ The signal tone stops.

Note: If there is no further operation following the signal tone, the display shows the "Standing time timer" function with the + symbol. The display shows how much time has elapsed since the cooking time ended. After approx. 20 minutes without any further operation, the appliance switches to low power mode.

Changing the cooking time

Requirement: You have set a type of heating and a temperature.

1. Press ◔.
- ✔ The display shows h : min for hours and minutes.
2. Press the required value and use C to delete the value or use the control ring to change the value.
   - ▸ Turn the control ring slowly to change the value in smaller increments.
   - ▸ Turn the control ring quickly to change the value in greater increments.

   The maximum possible cooking time depends on the type of heating.
- ✔ The appliance automatically calculates the time for the cooking time end.
3. Press < or press on the selected cooking time to switch to the previously stored appliance display.
   If you do not use the appliance for an extended period, the display returns to the previously stored appliance display.
- ✔ The display shows the temperature, the type of heating, the remaining cooking time, and the cooking time end.

Deleting the cooking time

Tip: In the "Manual" appliance display, double-click on the cooking time in order to delete the cooking time without switching to the timer settings.

1. Press ◔.
- ✔ The display shows h : min for hours and minutes.
2. Press the required value and use C to delete the value.
- ✔ The display shows –:–.

3. Press < or press on the selected cooking time to switch to the previously stored appliance display. If you do not use the appliance for an extended period, the display returns to the previously stored appliance display.

✔ The display does not show a cooking time.

9.5 Cooking time end

As soon as you set a cooking time, the display shows the cooking time end. You can delay the cooking time end by a maximum of 12 hours.
For example, if you set a cooking time of 90 minutes at 10 a.m., you can delay the end of the cooking time so that the cooking process ends at 11.30 p.m. at the latest.
For most types of heating, the maximum cooking time is 24 hours.
For the "Dehydrating" type of heating, the maximum cooking time is 72 hours.
Bear in mind that food which spoils easily should not be left in the appliance for too long.

Delaying the cooking time end

Requirement: No core temperature is set. You cannot use the "Cooking time" and "Core temperature probe" functions at the same time.

1. Place the food in the cooking compartment.
2. Press ◔.

✔ The display shows h : min for hours and minutes.

3. Set the cooking time. →*Page 19*

✔ The appliance automatically calculates the time for the cooking time end.

4. Press < or press on the selected cooking time to switch to the previously stored appliance display. If you do not use the appliance for an extended period, the display returns to the previously stored appliance display.
5. Press on the cooking time end.
6. Use the control ring to set the required cooking time end.
7. Press ▶.

✔ The appliance switches to standby.
✔ The display shows the temperature, the type of heating, and the cooking time end.
✔ If the cooking time end is one or more days in the future, the display shows "+1d".
✔ The appliance starts at the calculated time and automatically switches off once the cooking time has elapsed.
✔ After the cooking time has elapsed, the display shows 00:00 and a signal tone sounds.

8. Turn the control ring or open the appliance door. The appliance door opens automatically if you have activated this function.
→ *"Opening the appliance door automatically after the cooking process", Page 18*

✔ The signal tone stops.

Note: If there is no further operation following the signal tone, the display shows the "Standing time timer" function with the + symbol. The display shows how much time has elapsed since the cooking time ended. After approx. 20 minutes without any further operation, the appliance switches to low power mode.

Resetting the delay of the cooking time end

Note: In the "Manual" appliance display, double-click on the cooking time end in order to reset the delay of the cooking time end without switching to the timer settings.

Requirement: You have used the control ring to manually set the cooking time end.

1. Press ⇥.
2. To reset the delay of the cooking time, press ↺.

✔ The appliance calculates the cooking time end based on the cooking time.
✔ The display shows the cooking time end.

3. Press < or press on the cooking time end to switch to the previously stored appliance display. If you do not use the appliance for an extended period, the display returns to the previously stored appliance display.

9.6 Count-up cooking timer

If no cooking time is set, the display shows the time that has elapsed since the start of the process.
In the basic settings, you can switch the "Count-up cooking timer" function on or off.

Resetting "Count-up cooking timer"

1. Press and hold ◔.
2. Press ↺.

✔ The "Count-up cooking timer" function is reset.

10 Long-term timer

You can use this function to keep food warm and cook food for up to 74 hours without having to switch the appliance on or off. You can select the "Top + bottom heat" type of heating or "Hot air" type of heating, the temperature and the required cooking time.
Bear in mind that food which spoils easily should not be left in the appliance for too long.
You can use the "Long-term timer" function to program 9 different heating cycles with a total cooking time of 74 hours. Set a start time and an end time. The display shows which settings have been selected.
You can define whether the interior lighting is switched on or switched off during the selected cooking time.
At the end of the selected cooking time, the appliance automatically deactivates the function. If required, you can deactivate the "Long-term timer" function at any time using the on/off button ⏻.

If the "Long-term timer" function is active, the display screen does not change when you approach the appliance.
If the "Long-term timer" function is active, you cannot operate the appliance via the display and the control ring and you can only open the door manually using the manual door opening aid. Install the manual door opening aid before you start the "Long-term timer" function.
If the "Long-term timer" function is active, the "Automatic door opening at the end of the cooking process" function is not available.
If the "Long-term timer" function is active and you open the appliance door, the appliance ends the heating operation after a randomly selected time of approx. 20 to 30 seconds. If you close the appliance door again, the appliance starts the heating operation after a randomly selected time of approx. 20 to 30 seconds. To avoid interrupting the heating operation, only open the appliance door between two heating operations.

10.1 Opening the "Long-term timer" function

Requirement: The "Long-term timer" function is set to "On" in the basic settings →*Page 31*.

1. Swipe repeatedly from left to right until the display shows "Modes & Service".
2. Use the control ring to select the "Long-term timer" function.
3. Set the switch to the right of the "Long-term timer" list entry to "On".

✔ The display shows the start time and the end time.

10.2 Selecting a time period for the "Long-term timer" function

Requirement: The "Long-term timer" function is set to "On" in the basic settings →*Page 31*.

1. Press the start time.
2. Use the control ring to change the start time.
3. Press <.

✔ The appliance automatically calculates the time for the end time.
✔ The display shows the start time and the end time.

4. Press the end time.
5. Use the control ring to change the end time.

✔ The display shows the start time and the end time.

6. Press ✓ to confirm.

✔ The display shows ⏲.

Note: If you set a delayed start time for the "Long-term timer" function, you can only start cooking processes with a programmed end time.
The following functions are not available:

- Pyrolytic self-cleaning
- Some cooking programmes
- Cooking processes with a set core temperature
- Cooking processes without a cooking time end

10.3 Selecting the settings for the interior lighting while the "Long-term timer" function is active

Requirement: A start time and an end time are selected.

→ *"Selecting a time period for the Long-term timer function", Page 21*

1. Press →.
2. To switch the interior lighting on at the lowest lighting level for the entire time while the "Long-term timer" function is active, set the switch for the interior lighting to "On".
3. To switch the interior lighting off for the entire time while the "Long-term timer" function is active, set the switch for the interior lighting to "Off".

✔ The display shows the start time and the end time.

4. To program the first heating cycle, press +.
→ *"Setting heating cycles", Page 21*

10.4 Setting heating cycles

1. Press ⏲.

✔ The display shows the settings that have been selected for the "Long-term timer" function.

2. Press "Summary".
3. Press ←.
4. Press +.
5. Press the temperature to set it.
   ▸ Use the control ring to select the required temperature and press <.
6. Press the current symbol for the type of heating to set the type of heating.
   ▸ Use the control ring to select the required type of heating and press <.
7. Press the start time to change it.
   ▸ Use the control ring to change the start time and press <.
8. Press the end time to change it.
   ▸ Use the control ring to change the end time and press <.

✔ The display shows the settings for the first heating cycle.

9. Press ✓ to confirm.
10. To program a further heating cycle, if needed, press +.
    ▸ Program the settings for the further heating cycle. You can program up to 9 heating cycles.

✔ The display shows the settings for the programmed heating cycles.
✔ The display shows the start time and the end time for the "Long-term timer" function.

11. Touch the control ring.

✔ The display shows the settings for the programmed heating cycles.

12. Navigate though the list of programmed heating cycles in the menu with the control ring.

10.5 Changing the time period for the "Long-term timer" function

1. Press ⏲.

✔ The display shows the settings that have been selected for the "Long-term timer" function.

2. Press "Summary".
3. Press ←.
4. Press →.

✔ The display shows the start time and the end time.

5. Press the start time and use the control ring to change the start time.

10.6 Changing settings for the interior lighting

1. Press ⏲.
✔ The display shows the settings that have been selected for the "Long-term timer" function.
2. Press "Summary".
3. Press ←.
4. To switch the interior lighting on at the lowest lighting level for the entire time while the "Long-term timer" function is active, set the switch for the interior lighting to "On".
5. To switch the interior lighting off for the entire time while the "Long-term timer" function is active, set the switch for the interior lighting to "Off".

10.7 Changing the heating cycle

1. Press ⏲.
✔ The display shows the settings that have been selected for the "Long-term timer" function.
2. Press "Summary".
3. Press ←.
4. Navigate though the list of programmed heating cycles in the menu with the control ring and press the required heating cycle.
5. To change the settings for the heating cycle, press the corresponding settings.
6. To save the changed setting, press <.

10.8 Deleting a heating cycle

1. Press ⏲.
✔ The display shows the settings that have been selected for the "Long-term timer" function.
2. Press "Summary".
3. Press ←.
4. Navigate though the list of programmed heating cycles in the menu with the control ring and select the required heating cycle.
5. Press 🗑.

10.9 Starting the "Long-term timer" function

Tip: Install the manual door opening aid before you start the "Long-term timer" function.

▸ Press ▶ to start.
✔ The "Long-term timer" function starts.
✔ At the end of the "Long-term timer" function, the appliance switches off.

10.10 Switching off the "Long-term timer" function

1. Swipe repeatedly from left to right until the display shows "Modes & Service".
2. Use the control ring to select the "Long-term timer" function.
3. Set the switch to the right of the "Long-term timer" list entry to "Off".

Note: To switch off the "Long-term timer" function, you can also press ⏻ on the control ring.

11 Childproof lock

Activate the "Childproof lock" function so that children cannot accidentally switch the appliance on or change the settings.
If the childproof lock is activated, operation via the display and the control ring is not possible.
If the childproof lock is activated and the power fails, the childproof lock can be deactivated when the power comes back on.
You can activate the childproof lock even during operation.

11.1 Activating the childproof lock

Requirement: In the basic settings →*Page 31*, the option "On" is set for the "Display child lock" function.
1. Press ⚙.
2. Press 🔒.
✔ The display shows 🔒.
✔ The "Childproof lock" function is activated.

11.2 Deactivating the childproof lock

1. Press and hold 🔒 for approx. 2 seconds.
✔ The "Childproof lock" function is deactivated.
2. Set the appliance as normal.

12 Searing function

With the searing function, the appliance heats up at full capacity for approx. 3 minutes. You can use this to sear steaks, for example.
To use the searing function, you need a roaster and pull-out system – these are special accessories. [1]

12.1 Starting the searing function

Requirement: The "Roaster function" type of heating is set.
1. Press ▶.
✔ ▶ lights up orange.
2. Press .
✔ The searing function starts.

[1] The function is not currently available.

Tip: You can also set the searing function to start several times consecutively.

Note: When the frying stage has ended, ▸ lights up white.

12.2 Ending the searing function early

▸ Press ■.

13 Favourites

In the "Favourites" appliance display, you can save preferred automatic programmes, setting recommendations or combinations of type of heating, temperature, core temperature or cooking time. The appliance adopts the selected settings, such as temperature, cooking time, weight or level of browning for the favourites.
You can individually select the names for the favourites.
You can use the Home Connect app to change the saved settings for the favourite or the order of the favourites.
After starting the favourite, you can change the settings.
→ *"Changing the favourite", Page 23*

13.1 Creating the first favourites

Notes
- You can save a food as a favourite at the beginning or end of an automatic programme or a setting recommendation.
- You can save a favourite in the "Manual operation" appliance display. As soon as you have selected the settings for the temperature, the type of heating and the cooking time, the display shows ☐.

Requirement: The settings for the favourites are selected or a heating process ends.
1. Press ☐.
✔ The display shows the "Favourites" appliance display.
2. Press ✎.
3. Use the keyboard to enter a name.
4. Press ✓.

13.2 Selecting a favourite

1. Swipe repeatedly from right to left until the display shows "Favourites".
→ *"Appliance displays", Page 10*
2. Use the control ring to select the desired favourites.
3. Press the favourites.

13.3 Renaming a favourite

Requirement: The favourite has been selected.
→ *"Selecting a favourite", Page 23*
1. Press ✎.
2. Enter the name for the favourite.
3. Press ✓ to confirm.

13.4 Starting the favourite

Requirement: The favourite has been selected.
→ *"Selecting a favourite", Page 23*
▸ Press ▸ to start.

13.5 Changing the favourite

The availability of settings depends on the favourite selected.

Requirements
- The favourite has been selected.
→ *"Selecting a favourite", Page 23*
- The favourite is stopped.

1. Change the selected settings, e.g. the temperature, the type of heating or the cooking time.
The "Add grill" function is unavailable.
The "Automatic door opening at process end" function is available.
If you have saved an automatic programme as a favourite, you can only change certain settings, e.g. the weight, the required degree of browning, the thickness of the food or the cooking level of the food.
If you have saved a setting recommendation as a favourite, you can change the settings on the appliance as soon as the favourite is started.
You can only save the changed settings via the Home Connect app. As soon as the favourite is stopped or has finished, the Home Connect app asks if you would like to save the settings in the favourite.
2. Press ✓.
3. Press ▸ to start.
✔ The operation starts with the changed settings.

Note: The appliance does not save the changed settings in the selected favourite. If you select the favourite again, the settings match the settings when the favourite was created.
You can use the Home Connect app to change the settings for the favourites.

13.6 Deleting a favourite

Requirement: The favourite has been selected.
→ *"Selecting a favourite", Page 23*
1. Press 🗑.
2. Press ✓ to confirm.

14 Programmes

The "Programmes" appliance display includes the automatic programmes and setting recommendations.

14.1 Automatic programmes

You can use the "Automatic programmes" function to cook a wide variety of food. The appliance selects the optimal setting for you.

In automatic programmes, the appliance defines the optimal settings after you enter the weight and required cooking result, for example. The automatic programmes are labelled with a checkmark in the overview list.
The cooking time only begins once the appliance has preheated. You can find information about the accessories or shelf levels in the tip for the respective programme.

Note: In the basic settings →*Page 31*, you can filter automatic programmes, e.g. with the following filters "Vegetarian" or "No meat & poultry".

Information about the settings for the automatic programmes

Observe the instructions for the settings of the automatic programmes.

- The cooking result depends on the quality of the food and the size and type of cookware. For an optimal cooking result, only use food that is in good condition and meat that is chilled to refrigerator temperature. For frozen food, only use food straight out of the freezer.
- The food is divided into categories. One or more dishes are listed for each category. The display shows the last selected meal.
- For some dishes, the appliance asks you to enter, for example, the weight, the desired level of browning, the thickness of the food or the cooking level of the food.
- For some food, preheat the empty cooking compartment for an optimal cooking result. Only place the food in the cooking compartment once the preheating is complete and a message is shown on the display.
- The appliance displays the selected settings next time as a suggestion.
- For some programmes, you need the core temperature probe. Use the core temperature probe →*Page 26* for these programmes.
- To achieve good results, the cooking compartment must not be too hot for the type of food you have selected. If the cooking compartment is too hot, the display shows a corresponding notification. Allow the appliance to cool and restart it.

Selecting an automatic programme

1. Swipe repeatedly from right to left until the display shows "Programmes".
✔ The display shows the first programme in the "Vegetables" category or the last set automatic programme.
✔ The display shows the preselected values for the programme or the last set values.
✔ The display shows a tip and symbols for the Favourites →*Page 23* category and for the programme start.
2. Use the control ring to select the required meal and press on the required meal.
✔ The display shows the name of the selected dish and the corresponding values.

Changing category

1. Press the symbol for the category.
✔ The display shows the available categories in the ring menu.
2. Select the required category with the control ring.
3. Press < or press the category in order to confirm the selection.
✔ The display shows the first dish in the selected category and the corresponding values.

Changing the programme

1. Press on the name of a dish or navigate through the list of dishes in the menu with the control ring.
2. Press the required food.
✔ The display shows the name of the selected dish and the corresponding settings.
3. Press the setting.
4. Use the control ring to change the setting and press on the required setting.
Not all settings can be changed.
You cannot change the type of heating.
5. Press <.
✔ The display shows the name of the selected dish and the corresponding settings.
6. Press ▭.
✔ The display shows information about the accessories and preparation.
7. Follow the information on the display.

Starting the automatic programme

▸ Press ▶.
✔ Once the cooking time has elapsed, a signal tone sounds.
✔ The appliance stops heating.

Note: If you open the appliance door during an automatic programme, this affects the cooking result. Do not open the appliance door, or only open it briefly. The appliance interrupts the automatic programme and continues to run when you close the appliance door.

Extending the cooking time

If you are still not satisfied with the cooking result, you can increase the cooking time again.

1. Press 00.00.
2. Select the required cooking time.
3. Press ✓ to confirm.

Cancelling the automatic programme

Note: Once you have started the automatic programme, you can no longer change the settings.

▸ Press ■.
✔ The appliance ends the automatic programme.

Saving a programme as a favourite

You can save a programme as a favourite at the start or end of an automatic programme.

1. Press ⍞.
✔ The display shows the "Favourites" appliance display.
2. Press ⍁.
3. Use the keyboard to enter a name.
4. Press ✓.

14.2 Recommended settings

With setting recommendations, the appliance specifies the optimal type of heating.
The setting recommendations are not labelled with a checkmark in the overview list.

If a weight is specified in the tip, the recommended temperature and the cooking time relate to this weight specification. You can adapt the temperature and cooking time within the available ranges.
The cooking time only begins once the appliance has preheated. You can find information about the accessories or shelf levels in the tip for the respective programme.

Information on the setting recommendations

Observe the information on the setting recommendations.

- The cooking result depends on the quality of the food and the size and type of cookware. For an optimal cooking result, only use food that is in good condition and meat that is chilled to refrigerator temperature. For frozen food, only use food straight out of the freezer.
- The food is divided into categories. One or more dishes are listed for each category. The display shows the last selected meal.
- With the setting recommendations, the appliance specifies the type of heating.
- You can change the temperature and the cooking time in the specified areas.
- For some food, preheat the empty cooking compartment for an optimal cooking result. Only place the food in the cooking compartment once the preheating is complete and a message is shown on the display.
- The appliance displays the selected settings next time as a suggestion.
- To achieve good results, the cooking compartment must not be too hot for the type of food you have selected. If the cooking compartment is too hot, the display shows a corresponding notification. Allow the appliance to cool and restart it.

Selecting a setting recommendation

1. Swipe repeatedly from right to left until the display shows "Programmes".
✔ The display shows the first programme in the "Vegetables" category or the last set automatic programme.
✔ The display shows the preselected values for the programme or the last set values.
✔ The display shows a tip and symbols for the Favourites →*Page 23* category and for the programme start.
2. Use the control ring to select the required meal and press on the required meal.
✔ The display shows the name of the selected dish and the corresponding values.

Changing category

1. Press the symbol for the category.
✔ The display shows the available categories in the ring menu.
2. Select the required category with the control ring.
3. Press < or press the category in order to confirm the selection.
✔ The display shows the first dish in the selected category and the corresponding values.

Changing the programme

1. Press on the name of a dish or navigate through the list of dishes in the menu with the control ring.
2. Press the required food.
✔ The display shows the name of the selected dish and the corresponding settings.
3. Press the setting.
4. Use the control ring to change the setting and press on the required setting.
Not all settings can be changed.
You cannot change the type of heating.
5. Press <.
✔ The display shows the name of the selected dish and the corresponding settings.
6. Press ☐.
✔ The display shows information about the accessories and preparation.
7. Follow the information on the display.

Starting a setting recommendation

▸ Press ▶.
✔ Once the cooking time has elapsed, a signal tone sounds.
✔ The appliance stops heating.

Note: If you open the appliance door when a setting recommendation is running, this affects the cooking result. Do not open the appliance door, or only open it briefly. The appliance interrupts the setting recommendation and continues to run when you close the appliance door.

Extending the cooking time

If you are still not satisfied with the cooking result, you can increase the cooking time again.

1. Press 00.00.
2. Select the required cooking time.
3. Press ✓ to confirm.

Setting recommendations

Note: Once you have started the setting recommendation, you can change the settings.

1. Press on the setting recommendation.
2. Change the desired settings.

Saving a programme as a favourite

You can save a programme as a favourite at the start or end of a setting recommendation.

Requirements

- The temperature and type of heating are set.
- The cooking time or core temperature is set.

1. Press ☐.
✔ The display shows the "Favourites" appliance display.
2. Press ✎.
3. Use the keyboard to enter a name.
4. Press ✓.

15 Core temperature probe

The core temperature probe makes it possible to cook with exact precision. The core temperature probe measures the temperature at 3 measuring points inside the food. When the required core temperature is reached, the appliance automatically switches off, ensuring that all food is cooked perfectly.

⚠ WARNING – Risk of burns!
The cooking compartment and the core temperature probe become very hot.
- Use oven gloves when inserting and removing the core temperature probe.

ATTENTION
Temperatures above 250 °C damage the core temperature probe.
- Only use the core temperature probe in your appliance at a maximum temperature of 250 °C.
- Do not use the core temperature probe with the "Grill" type of heating.
- Before using the "Grill" type of heating, remove the core temperature probe from the cooking compartment.

⚠ WARNING – Risk of electric shock!
An incorrect core temperature probe may damage the insulation.
- Only use the core temperature probe that is suitable for this appliance.

ATTENTION
Aggressive cleaning agents may damage the core temperature probe.
- Do not clean the core temperature probe in the dishwasher.

⚠ WARNING – Risk of injury!
The core temperature probe is sharp.
- Handle the core temperature probe with care.

Only use the core temperature probe supplied. The core temperature probe →*Page 14* is available as a spare part from customer service or the online shop.
If you use the core temperature probe, never place the food on the top shelf level.
After use, always remove the core temperature probe from the cooking compartment. Never store the core temperature probe in the cooking compartment.
After each use, clean the core temperature probe with a damp cloth.
The measurable range is 15 °C to 100 °C. Outside of the measurable range, the display shows "<15 °C" or ">100 °C" for the current core temperature.
If you leave food in the cooking compartment for some time after cooking, the core temperature will continue to rise somewhat due to the residual heat in the cooking compartment.

15.1 Inserting the core temperature probe into the food

1. Insert the core temperature probe fully into the food.
2. Do not insert the core temperature probe into the fat.
3. Ensure that the core temperature probe is not touching any cookware or any bones.
4. Place the food in the cooking compartment.

Inserting the core temperature probe into meat

1. Insert the core temperature probe at the thickest point on the side as far as it will go into the meat.

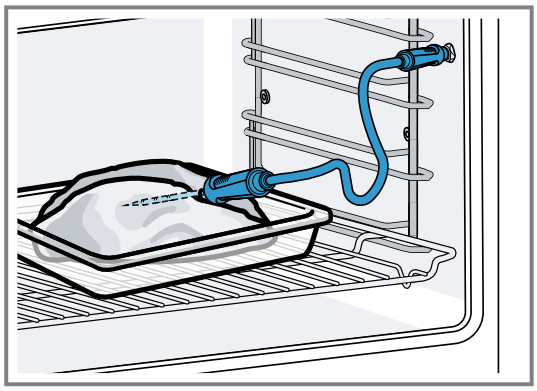

2. If there is more than one piece of meat, insert the core temperature probe into the middle of the thickest piece.

Inserting the core temperature probe into poultry

1. Insert the core temperature probe as far as it will go into the thickest point in the breast.

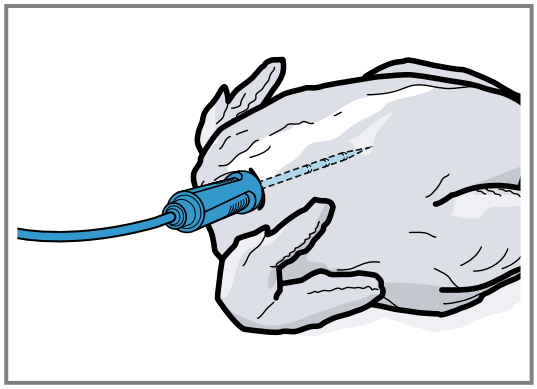

2. Depending on its composition, insert the core temperature probe into the poultry crossways or lengthways.

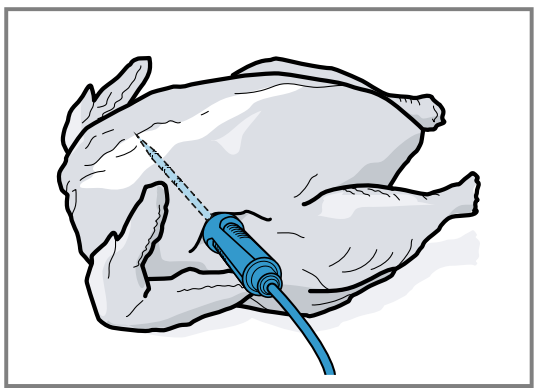

3. With poultry, ensure that the tip of the core temperature probe does not protrude into the cavity in the middle of the bird.

Inserting the core temperature probe into fish

1. Insert the core temperature probe behind the head as far as it will go towards the spine.

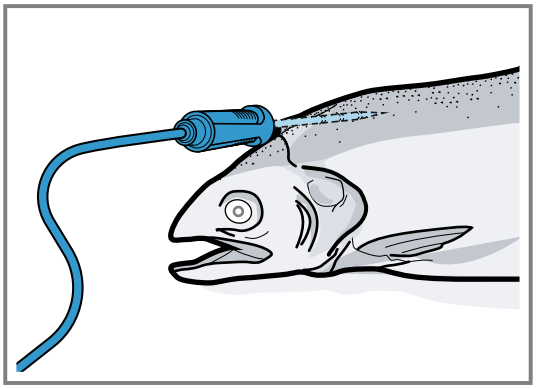

2. Place the whole fish onto the wire rack and prop it up in the swimming position using half a potato.

15.2 Turning the food

1. Do not pull out the core temperature probe when turning the food.
   If you pull out the core temperature probe during operation, the appliance resets all settings. You must reset the settings.
2. Turn the food.
3. Once you have turned the food, check that the core temperature probe is correctly positioned in the food.

15.3 Setting the core temperature probe

ATTENTION
The heat of the grilling surface may damage the core temperature probe.
- Ensure that the distance between the glass grilling surface and the core temperature probe and the cable of the core temperature probe is a few centimetres. In doing so, ensure that the meat can expand during the cooking process.

You may damage the cable of the core temperature probe with the appliance door.
- Do not trap the cable of the core temperature probe in the appliance door.

Requirement: A cooking time end is not set. The cooking time end and core temperature probe functions are not available at the same time.

1. Slide the food into the cooking compartment with the core temperature probe inserted.
2. Insert the core temperature probe into the socket in the cooking compartment.
3. Close the appliance door.
✔ The display shows the current cooking compartment temperature and the symbol for the core temperature probe.
4. Select the required type of heating and cooking compartment temperature with the control ring.
5. Press .
6. Use the control ring to select the required core temperature →*Page 27*.
   - Ensure that the set core temperature is higher than the current core temperature.

   You can change the set core temperature at any time.
7. The set core temperature can be cleared and reset as needed with C or the control ring.
8. Press < or press the set core temperature.
9. Press ▶.

✔ The appliance heats up using the set type of heating.
✔ Once you have set the core temperature, the display shows the type of heating and the current core temperature.
✔ Once you have set the core temperature, the display shows the type of heating and intermittently switches to the estimated time →*Page 28* until the core temperature is reached and the current and set core temperature.
✔ If the current core temperature is 5 °C below the set core temperature, the display shows the current and set core temperature as enlarged.
✔ Once the core temperature for the food has been reached, the display shows the required core temperature alongside the set core temperature and a signal sounds.
✔ The appliance ends the cooking process automatically.

Note: If you do not continue to operate the appliance after the signal tone, the display shows how much time has elapsed since the food reached the core temperature.
Once you start operating the appliance again, the appliance clears the time display. After approx. 20 minutes without any further operation, the appliance switches to low power mode.

15.4 Deleting the set core temperature

- In the "Manual" appliance display, double-click on the temperature.
  → *"Appliance displays", Page 10*

✔ The display shows the current core temperature.

15.5 Changing the set core temperature

1. Press .
2. Change the set core temperature with the control ring.
   Once the display shows the set core temperature enlarged in the 12 o'clock position, you can change the set core temperature directly using the control ring.

15.6 Core temperature guideline values

The following overview provides you with guideline values for the core temperature. The guideline values depend on the quality and composition of the food.
Only use fresh food that has not been frozen. For hygiene reasons, ensure that critical foods such as fish and game reach a core temperature of at least 62-70 °C and poultry and minced meat 80-90 °C.

Food	Core temperature guideline value in °C
Beef	
Sirloin, fillet of beef, entrecôte, roast beef, rare	47-55
Sirloin, fillet of beef, entrecôte, roast beef, medium rare	56-63

Food	Core temperature guideline value in °C
Sirloin, fillet of beef, entrecôte, roast beef, medium	64-70
Sirloin, fillet of beef, entrecôte, roast beef, well done	71-75
Pork	
Joint of pork	75-80
Loin of pork, medium rare	65-70
Loin of pork, medium	71-75
Loin of pork, well done	76-80
Meatloaf	85
Fillet of pork, medium rare	65-70
Pork fillet, medium	71-75
Veal	
Joint of veal, well done	75-80
Breast of veal, stuffed, well done	75-80
Saddle of veal, medium	64-70
Saddle of veal, well done	71-75
Fillet of veal, rare	50-55
Fillet of veal, medium rare	56-63
Fillet of veal, medium	64-70
Fillet of veal, well done	71-75
Game	
Saddle of venison	60-70
Leg of roe venison	70-75
Venison loin steaks	65-70
Saddle of hare, saddle of rabbit	65-70
Poultry	
Chicken	90
Guinea fowl	80-85
Goose, turkey, duck	85-90
Duck breast, medium rare	55-60
Duck breast, medium	61-70
Duck breast, well done	71-80
Ostrich steak	60-65

Food	Core temperature guideline value in °C
Lamb	
Leg of lamb, medium	65-69
Leg of lamb, well done	70-80
Saddle of lamb, medium rare	55-60
Saddle of lamb, medium	61-64
Saddle of lamb, well done	65-75
Mutton	
Leg of mutton, medium rare	70-75
Leg of mutton, medium	76-80
Leg of mutton, well done	81-85
Saddle of mutton, medium	70-75
Saddle of mutton, well done	76-80
Fish	
Fillet, whole, medium	58-64
Fillet, whole, well done	65-68
Terrine	62-65
Other	
Bread	96
Pâté	72-75
Terrine	70-75
Foie gras	45-60
Reheating food	75

15.7 Estimated cooking time

After preheating, if the appliance has a temperature setting above 120 °C and the core temperature probe is inserted, the display shows an estimated cooking time a few minutes into the cooking time. The appliance continuously updates the estimated cooking time.
The estimated cooking time is only available if you connect your appliance to the Home Connect app.
The longer the cooking process lasts, the more precise the estimated cooking time becomes. Do not open the appliance door; this distorts the estimated cooking time.
The display shows the estimated cooking time in manual operation and in the automatic program.
To display the current core temperature, press on the set core temperature.

16 Home Connect

This appliance is network-capable. Connecting your appliance to a mobile device lets you control its functions via the Home Connect app, adjust its basic settings and monitor its operating status.
The Home Connect services are not available in every country. The availability of the Home Connect function depends on the availability of the Home Connect services in your country. You can find information about this at: *www.home-connect.com*.

The Home Connect app guides you through the entire login process. Follow the instructions, noting the information in the Home Connect app.

Notes

- Please note the safety precautions in this instruction manual and make sure that they are also observed when operating the appliance via the Home Connect app.
  → *"Safety", Page 2*

- Operating the appliance on the appliance itself always takes priority. During this time it is not possible to operate the appliance using the Home Connect app.
- In networked standby mode, the appliance requires a maximum of 2 W.

16.1 Setting up Home Connect

Requirements
- The appliance is connected to the power supply and is switched on.
- You have a mobile device with a current version of the iOS or Android operating system, e.g. a smartphone.
- The appliance is receiving signals from the WLAN home network (Wi-Fi) at its installation location.
- The mobile device and the appliance are within range of your home network's Wi-Fi signal.

1. Scan the following QR code.



   You can install the Home Connect app and connect your appliance via the QR code.
2. Follow the instructions in the Home Connect app.

16.2 Home ConnectSettings

You can adjust the home network settings in your appliance's basic settings.
Which settings the display shows will depend on whether Home Connect has been set up and whether the appliance is connected to your home network.
You can switch the network connection on or off as required. The network information is retained after the appliance is switched off. After switching on the appliance, wait for a few seconds until it reconnects to the home network.
The display uses different symbols to show the connection strength to the router.

Note: In networked standby mode, the appliance requires a maximum of 2 W.

You can use the Home Connect app to access the appliance's functions. If you select the "Off (monitoring only)" setting in the basic settings →*Page 31* for "Remote start", the Home Connect app only shows the appliance's operating status and you can configure the settings.
If you select the "Permanent" setting in the basic settings →*Page 31* for "Remote start", you can start and operate your appliance at any time without any prior approval on the appliance.
If you select the "Manual" setting in the basic settings →*Page 31* for "Remote start", the appliance requires approval in the control centre in order to start a function.
In the basic settings →*Page 31*, you can use "Network information" to display the network information.
In the basic settings →*Page 31*, you can use "Network credentials reset" to delete all network access data from the appliance at any time.

16.3 Starting functions with the Home Connect app via manual "Remote start"

You can use the Home Connect app to set the appliance remotely via the "Remote start" function. If you select the "Manual" setting in the basic settings for "Remote start", the appliance requires approval in the control centre in order to start a function.

⚠ **WARNING – Risk of fire!**
Combustible objects that are left in the cooking compartment may catch fire.
- ▸ Never store combustible objects in the cooking compartment.
- ▸ If smoke is emitted, the appliance must be switched off or the plug must be pulled out and the door must be held closed in order to stifle any flames.

Requirements
- The appliance is connected to the home network and to the Home Connect app.
- To start a function, the "Manual" setting is selected in the basic settings for "Remote start".

1. To activate manual remote start, press ⊜ and then ☝.
2. Configure a setting in the Home Connect app and send it to the appliance.
3. Start a function.
   Note: If you open the appliance door more than 15 minutes after activating remote start or after the operation ends, the appliance deactivates the manual remote start.
   24 hours after activating remote start, the appliance deactivates the manual remote start.

16.4 Starting functions with the Home Connect app via permanently activated "Remote start"

You can use the Home Connect app to set and start the appliance remotely via the "Remote start" function. If you select the "Permanent" setting in the basic settings for "Remote start", the appliance does not require approval in the control centre in order to start a function.

⚠ **WARNING – Risk of fire!**
Combustible objects that are left in the cooking compartment may catch fire.
- ▸ Never store combustible objects in the cooking compartment.
- ▸ If smoke is emitted, the appliance must be switched off or the plug must be pulled out and the door must be held closed in order to stifle any flames.

Requirements
- The appliance is connected to the home network and to the Home Connect app.
- To start a function, the "Permanent" setting is selected in the basic settings for "Remote start".

1. Configure a setting in the Home Connect app and send it to the appliance.
2. Start a function.

16.5 Using the Home Connect app to change settings

You can use the Home Connect app to set the appliance remotely.

⚠ **WARNING – Risk of fire!**
Combustible objects that are left in the cooking compartment may catch fire.
- ▸ Never store combustible objects in the cooking compartment.
- ▸ If smoke is emitted, the appliance must be switched off or the plug must be pulled out and the door must be held closed in order to stifle any flames.

Requirement: The appliance is connected to the home network and to the Home Connect app.
- ▸ Configure a setting in the Home Connect app and send it to the appliance.

16.6 Switching the Wi-Fi on or off

Requirement: The On and "Off" settings are only available if a connection to the Home Connect server has been established.
1. Press in the status bar.
2. Press in the control centre.
3. Press the required setting.
4. If required, press < to switch to the "Settings" appliance display.

16.7 Displaying the "Long-term timer" function with the Home Connect app

Requirement: The appliance is connected to Home Connect.
- ▸ Display or hide the "Long-term timer" function under "Settings" in the Home Connect app under "Additional settings".
- ✔ Under "Type of heating", the Home Connect app shows three options for the "Long-term timer" function.

Note: The appliance display shows the "Long-term timer" function under "Modes & Service".

16.8 Deactivate the "Long-term timer" function with programmed start time using the Home Connect app

Requirements
- The appliance is connected to Home Connect.
- A start time in the future is programmed on the appliance for the "Long-term timer" function.
- The programmed start time for the "Long-term timer" function has not yet been reached.
- ▸ Deactivate the "Long-term timer" function under "Settings" in the Home Connect app under "Additional settings".
- ✔ The "Long-term timer" function does not start.

16.9 Starting the "Long-term timer" function using the Home Connect app

The "Long-term timer" function is available in the Home Connect app. In the Home Connect app, you can start the "Long-term timer" function with "Hot air", with "Top + bottom heat" or without a heating cycle. A time-delayed start and the configuration of multiple heating cycles is not possible via the Home Connect app.

Requirement: In the Home Connect app, the "Long-term timer" function is activated under "Additional settings".

→ *"Displaying the 'Long-term timer' function with the Home Connect app", Page 30*
1. Under "Type of heating", select the "Long-term timer" function with "Hot air", with "Top + bottom heat" or without a heating cycle.
2. Press "Next".
3. For a heating cycle with "Hot air" or with "Top + bottom heat", select the temperature and press "Next".
4. Select the time period.
5. Press "Done".
6. Press "Start".

16.10 Software update

Your appliance's software can be updated using the software update function, e.g. for the purposes of optimisation, troubleshooting or security updates.
To do this, you must be a registered Home Connect user, have installed the app on your mobile device and be connected to the Home Connect server.
As soon as a software update is available, you will be informed via the Home Connect app and will be able to start the software update via the app. Once the update has been successfully downloaded, you can start installing it via the Home Connect app if you are in your home network (Wi-Fi). The Home Connect app informs you once installation is successful.
You can find the current software version in the Home Connect app under the appliance information for the appliance.

Notes
- The software update consists of two steps.
  - The first step is downloading.
  - The second step is installation on your appliance.
- You can continue to use your appliance during downloading. Depending on your personal settings in the app, software updates can also be set to download automatically.
- Installation takes a few minutes. You cannot use your appliance during installation.
- We recommend you install security updates as soon as possible.

16.11 Data protection

Please see the information on data protection.

The first time your appliance is registered on a home network connected to the Internet, your appliance will transmit the following types of data to the Home Connect server (initial registration):
- Unique appliance identification (consisting of appliance codes as well as the MAC address of the installed Wi-Fi communication module).
- Security certificate of the Wi-Fi communication module (to ensure a secure data connection).
- The current software and hardware version of your appliance.
- Status of any previous resetting to factory settings.

This initial registration prepares the Home Connect functions for use and is only required when you want to use the Home Connect functions for the first time.

Note: Please note that the Home Connect functions can only be utilised with the Home Connect app. Information on data protection can be retrieved in the Home Connect app.

17 Basic settings

You can configure the basic settings for your appliance to meet your needs.

17.1 Overview of the basic settings

Here you can find an overview of the basic settings and factory settings. The basic settings depend on the features of your appliance.

Symbol	Basic setting	Setting	Selection	Use
	Home network	WiFi	▪ On ▪ Off [1]	Switches the Wi-Fi on or off **Note:** The On and Off settings are only available if a connection to the Home Connect server has been established. All settings are retained after the appliance is switched off. Switch on the Wi-Fi in order to allow the appliance to be controlled via the app and to use additional appliance functions.
		Home Connect assistant	▪ During the initial connection to the Home Connect app: "Start" ▪ If you have already connected successfully to the Home Connect app: "Connect now"	Setting up Home Connect →*Page 28*
		Remote start	▪ Off (monitoring only) ▪ Manual [1] ▪ Permanent **Note:** The settings are only available if you have selected the "On" setting for Wi-Fi.	Setting "Remote start" → *"Starting functions with the Home Connect app via manual 'Remote start'", Page 29*
		Network information	▪ MAC address ▪ Wi-Fi SSID ▪ IPv4 address ▪ IPv6 address **Note:** The settings are only available if you have selected the "On" setting for Wi-Fi.	Displaying "Network information"

[1] Factory setting (may vary according to model)

Symbol	Basic setting	Setting	Selection	Use
		Network credentials reset	▪ Confirm The connections are reset. The appliance deletes saved network access data. **Note:** The settings are only available if you have selected the "On" setting for Wi-Fi.	Resetting the network access data
	Display	Brightness	▪ 1 ▪ 2 ▪ 3 ▪ 4 [1] ▪ 5 ▪ 6	Sets the brightness in stages
		Distant view	▪ "On" [1]: The display shows less content if you are at a greater distance. ▪ "Off": The display always shows the same content.	Switching the remote view on or off
		Screen in off-mode	▪ GAGGENAU logo"displayed on approach" [1] ▪ None	Sets the low power mode display →*Page 12*
		Ring behaviour	▪ "Standard": Press the required function and use the control ring to change the function ▪ "Quick selection" [1]: Use the control ring to change the function located above the control ring	Sets the control ring behaviour
		Display child lock	▪ "On" [1]: The symbol for the "Display child lock" function is only visible in the status bar if the "Display child lock" function is active. Control ring and touch fields are locked. ▪ "Off": The "Display child lock" function cannot be activated.	Displaying or hiding the symbol for the child lock →*Page 22* in the control centre
		Door lock	▪ Activated ▪ Off [1]	Activates or deactivates the door lock

[1] Factory setting (may vary according to model)

Symbol	Basic setting	Setting	Selection	Use
				Note: The door lock →*Page 13* prevents the appliance door from being opened accidentally. This is particularly useful when installing the appliance under the worktop.
		Display alignment	▪ Vertical [1] ▪ Horizontal	Aligns the display horizontally or vertically depending on the appliance's installation position or the user's body size
♫	Sounds	Switch-on/switch-off sounds	▪ Quiet ▪ Standard [1] ▪ Loud	Set the volume of the on/off tones
		Notification sounds	▪ Off ▪ Quiet ▪ Standard [1] ▪ Loud	Sets the volume of the notification tones **Note:** The notification tones for the warnings and error messages always remain switched on.
		Process sounds	Volume ▪ Off ▪ Quiet ▪ Standard [1] ▪ Loud "Repetitions": ▪ 1x ▪ "10 s": The appliance emits the signal tone repeatedly for 10 seconds. ▪ "30 s" [1]: The appliance emits the signal tone repeatedly for 30 seconds. ▪ "3 min": The appliance emits the signal tone repeatedly for 3 minutes. "Preheating signal": ▪ "On" [1] ▪ Off	▪ Set the volume of the process tones ▪ Set the required maximum duration of the process tones ▪ Activates or deactivates the process tone following preheating
		Visual feedback	▪ On ▪ Off [1]	Switches the pulsating light for programme end, notifications or error messages on or off

[1] Factory setting (may vary according to model)

Symbol	Basic setting	Setting	Selection	Use
		Volume reduction	▪ "On": Lower the volume for all tones to a certain volume level in a defined period ▪ "Reduced": Lower the volume for all tones to the "Quiet" volume level in a defined period and switch off the tones for cleaning ▪ "Off" [1]: Switch off all tones in a defined period Start time ▪ "22h" [1] End time ▪ "7h" [1]	Sets the lowering of the volume **Note:** The signal tones for warnings, error messages and switching on and switching off always remain switched on.
	Interior lighting	Brightness	▪ Dark ▪ Standard [1] ▪ Bright	Sets the brightness of the interior lighting
		Activation	▪ Automatic [1] ▪ Manual	Switches the interior lighting →*Page 7* on automatically or manually
		Light interaction	▪ On [1] ▪ Off	Sets the light interaction **Note:** If you are outside of the range that the appliance recognises, the appliance reduces the interior lighting to what is essential.
	Notifications	Info-i	▪ On [1] ▪ Off	Displays or hides additional information **Tip:** If you press ❶, the display shows additional information →*Page 13*. If you switch off the function, the display does not show any symbols or any additional information.
		Pop-up hints	▪ On [1] ▪ Off	Displays or hides the pop-up notifications →*Page 13*
	Language	-	▪ Deutsch ▪ French ▪ [...] ▪ English [1]	Setting the language

[1] Factory setting (may vary according to model)

Symbol	Basic setting	Setting	Selection	Use
	Time & Units	Time	▪ Time [1] ▪ "Automatic": Select the "Automatic" option if your appliance is connected to Home Connect.	Setting the time
		Time format	▪ 12 ▪ 24 [1]	Set the time format
		Temperature unit	▪ °C [1] ▪ °F	Set the temperature unit
		Weight unit	▪ "Metric": "g/kg" ▪ "Anglo-american": "oz/lb"	Set the weight unit
	Advanced	Display long-term timer	▪ On ▪ Off [1]	Displays or hides the "Long-term timer" function
		Demo mode	▪ On ▪ Off [1]	Activates or deactivates demo mode **Note:** The setting is only available in the first 3 minutes after connecting to the power supply.
		Factory settings	▪ Restore	Allows you to restore the appliance's factory settings **Note:** The appliance starts the initialisation. The display asks you to specify settings that the appliance installer has implemented.
	Appliance	Start screen	▪ Manual [1] ▪ Favourites ▪ Programmes	Select a display that shows the display after switching on
		Preselection heating methods	Overview of the available types of heating →*Page 11*.	Selects the preferred types of heating
			▪ On ▪ Off	▪ Selects the preferred type of heating that is available after the appliance is switched on ▪ If required, displays or hides additional types of heating at a later point **Note:** The sequence of the types of heating is defined.
		Food preference	▪ Off [1] ▪ Vegetarian ▪ No meat & poultry ▪ No fish & seafood ▪ No pork ▪ Kosher	Selects the preferred food for automatic programmes and setting recommendations

[1] Factory setting (may vary according to model)

Symbol	Basic setting	Setting	Selection	Use
		Count-up cooking timer	▪ On [1] ▪ Off	Sets the count-up cooking timer **Note:** The running cooking time is automatically counted up if no cooking time has been stored.
		User detection	"Behaviour": ▪ Automatic ▪ "Below 1.2 m"- "Below 0.1 m" "Installation height": ▪ Under 91.4 cm/36" ▪ Between 91.4 cm/36" and 150 cm/59" [1] ▪ Over 150 cm/59"	▪ Sets the distance from which the proximity sensor detects the user ▪ Sets the appliance's installation height **Note:** To ensure that the proximity sensor optimally detects the user, store the installation height of the appliance's upper edge.
		Rapid heating	▪ On [1] ▪ Off	Switches fast preheat on or off
		Catalyser heating	▪ On [1] ▪ Off	Switches the catalyser heating →*Page 13* on or off
		Introduction to the appliance	Start	Starting the appliance introduction **Note:** The appliance introduction contains a short description of the basic functions.

17.2 Changing the basic settings

1. Swipe repeatedly from left to right until the display shows Basic settings →*Page 31*.
✔ The display shows the symbols for the available settings in a ring menu.
2. Use the control ring to select the required basic setting.
3. Press the required basic setting.
✔ The display shows the settings for the selected basic setting.
4. Depending on the selected basic setting, use the control ring to select the setting or press the required setting.
   ▸ With a list menu, ensure that the required setting is above the horizontal line.
5. Use ⇄ to activate the setting or use the control ring to select the setting option and press the setting.
6. If required, use < to switch to the previous view.

18 Cleaning and servicing

18.1 Cleaning products

To avoid damaging the various surfaces on the appliance, do not use any unsuitable cleaning agents.

⚠ **WARNING – Risk of electric shock!**
An ingress of moisture can cause an electric shock.
▸ Do not use steam- or high-pressure cleaners to clean the appliance.

⚠ **WARNING – Risk of burns!**
The appliance and its parts that can be touched become hot during use.
▸ Caution should be exercised here in order to avoid touching heating elements.
▸ Young children under 8 years of age must be kept away from the appliance.

[1] Factory setting (may vary according to model)

⚠ **WARNING – Risk of injury!**
Scratched glass in the appliance door may develop into a crack.
- ▸ Do not use any harsh or abrasive cleaners or sharp metal scrapers to clean the glass on the appliance door, as they may scratch the surface.

ATTENTION
Unsuitable cleaning agents damage the surfaces of the appliance.
- ▸ Do not use harsh or abrasive cleaning products.
- ▸ Do not use cleaning products with a high alcohol content.
- ▸ Do not use hard scouring pads or cleaning sponges.
- ▸ Do not use any special cleaners for cleaning the appliance while it is hot.

Salt contained in new sponge cloths may damage surfaces.
- ▸ Wash new sponge cloths thoroughly before use.

Using oven cleaner in a hot cooking compartment damages the stainless steel surfaces.
- ▸ Never use oven cleaner in the cooking compartment when it is still warm.
- ▸ Remove all food remnants from the cooking compartment and the appliance door before you next heat up the appliance.

⚠ **WARNING – Risk of fire!**
Loose food remnants, fat and meat juices may catch fire.
- ▸ Remove coarse dirt from the cooking compartment and from the accessories.

Suitable cleaning agents

Only use cleaning agents that are suitable for the different surfaces on your appliance.

Appliance door

Range	Suitable cleaning agents	Information
Door panel	▪ Glass cleaner	Do not use a glass scraper. Clean it using a soft cloth or a microfibre cloth.
Door seal	▪ Hot soapy water	Clean with a dishcloth. Do not remove or scrub. Do not use metal scrapers or glass scrapers for cleaning.
Control ring	▪ Soapy water	Clean with a slightly damp soft cloth. Do not spray with any cleaning agent.

Cooking compartment

Range	Suitable cleaning agents	Information
Cooking compartment	▪ Hot soapy water	Clean with a dishcloth and dry with a soft cloth.
Very dirty cooking compartment	▪ Cleaning gel spray for ovens	The cleaning gel spray for ovens can be obtained from Customer Service or from the online shop. Observe the following information about the cleaning gel spray: ▪ The cleaning gel spray must not get into the door opening. ▪ Leave on for no more than 12 hours. ▪ Do not use on hot surfaces. ▪ Rinse off thoroughly with water. ▪ Follow the manufacturer's instructions.
Glass cover for the cooking compartment light	▪ Hot soapy water	Clean with a dishcloth.
Wire rack	▪ Hot soapy water	In the event of heavy soiling, leave to soak and use a brush. Do not clean in the dishwasher.
Accessories	▪ Dishwasher ▪ Hot soapy water	Soak burnt-on residues and remove with a brush. Rinse thoroughly with clean water.
Core temperature probe	▪ Hot soapy water	Wipe with a damp cloth Do not clean in the dishwasher.
Fully extendable telescopic pull-out rack (special accessory)	▪ Hot soapy water	Clean using a damp dish cloth and dry with a soft cloth/towel.
Roaster (special accessory)	▪ Hot soapy water	Soak and then clean with a dishcloth or scrubbing brush. Do not clean the roaster in the dishwasher.

18.2 Microfibre cloth

The honeycomb microfibre cloth is especially suitable for cleaning easily damaged surfaces, such as glass, glass ceramic, stainless steel or aluminium. The microfibre cloth removes liquid and greasy deposits in one go.
The microfibre cloth can be obtained from customer service or from the online shop.

18.3 Removing the shelf supports

The shelf supports can be removed for cleaning. You can also leave the shelves fitted in the appliance and clean them with the pyrolytic self-cleaning programme.

1. Place a tea towel in the cooking compartment to protect the enamel from scratches.
2. Undo the knurled nuts.

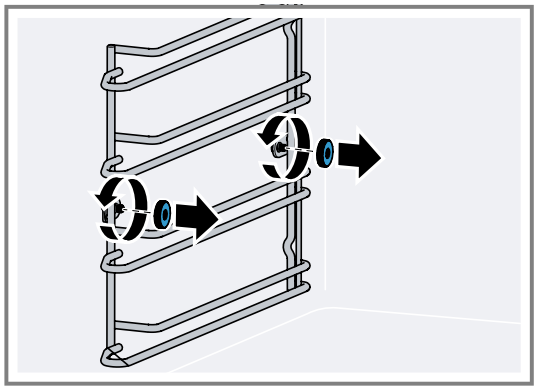

3. Lift the shelf supports slightly sideways away from the screw ① and pull them out towards the front ②.

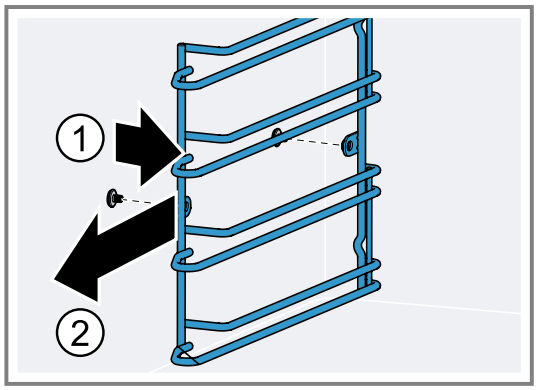

4. Clean the shelf supports with hot soapy water and a soft dish cloth.

18.4 Fitting the shelf supports

1. Fit the shelf supports on the correct side of the cooking compartment.
   The shelf supports for the left and right side of the cooking compartment are different.
2. Position the shelf support such that the indentation is located at the rear.

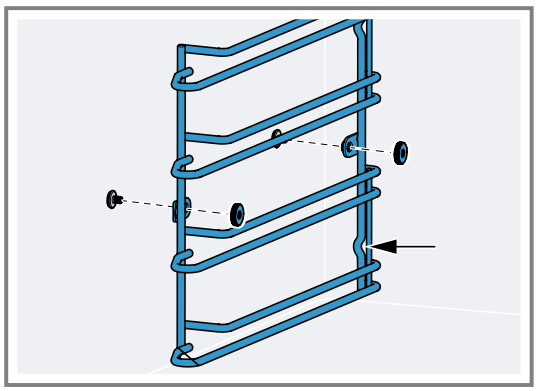

3. Tighten the knurled nuts.

18.5 Cleaning the fully extendable telescopic pull-out rack

ATTENTION
Aggressive cleaners cause damage to the fully extendable telescopic pull-out rack.

- ▸ Do not clean the fully extendable telescopic pull-out rack in the dishwasher.
- ▸ Do not place the fully extendable telescopic pull-out rack in rinsing water.
- ▸ Do not place the fully extendable telescopic pull-out rack under running water.

The cleaning programme causes damage to the fully extendable telescopic pull-out rack.

- ▸ Do not clean the fully extendable telescopic pull-out rack using the appliance's cleaning programme.

1. Remove the fully extendable telescopic pull-out rack.
2. Use a damp cloth to clean the pull-out rail.
   - ▸ Do not remove the lubricant on the pull-out rail.

   It is best to clean the pull-out rail while it is pushed in.

19 Pyrolytic self-cleaning

Follow these safety instructions when using the pyrolytic self-cleaning function.

⚠ **WARNING – Risk of fire!**
The outside of the appliance gets very hot when the cleaning function is in progress.

- ▸ Never hang combustible objects, e.g. tea towels, on the door handle.
- ▸ Leave the front of the appliance clear.
- ▸ Keep children away from the appliance.

⚠ **WARNING – Risk of serious harm to health!**
The appliance gets very hot when the cleaning function is in progress. The non-stick coating on baking trays and tins is destroyed and noxious gases are released.

- ▸ Never clean non-stick baking trays or baking tins using the cleaning function.
- ▸ Only clean enamelled accessories at the same time.

⚠ **WARNING – Risk of burns!**
The cooking compartment gets very hot when the cleaning function is in progress.

- ▸ Never open the appliance door.
- ▸ Allow the appliance to cool down.

- Keep children at a safe distance.

The outside of the appliance gets very hot when the cleaning function is in progress.
- Never touch the appliance door.
- Allow the appliance to cool down.
- Keep children at a safe distance.

⚠ WARNING – Risk of harm to health!
The cleaning function heats up the cooking compartment to a very high temperature so that food left over from roasting, grilling and baking will burn off. This process releases vapours, which can irritate mucous membranes.
- Keep the kitchen well ventilated while the cleaning function is running.
- Do not remain in the room for long periods.
- Keep children and pets away.

When the pyrolytic self-cleaning function is running, the appliance heats up to 485 °C. Residues from roasting, grilling or baking are incinerated. All you have to do is wipe the ash out of the cooking compartment.
The total duration of the pyrolytic self-cleaning function comprises the cleaning time and cooling period. Pyrolytic self-cleaning takes around 3 hours. The cooling time is approximately 1 hour. If required, you can delay the pyrolytic self-cleaning switch-off time, e.g. if you want the pyrolytic self-cleaning function to run overnight.

19.1 Preparing pyrolytic self-cleaning

⚠ WARNING – Risk of fire!
Loose food remnants, fat and meat juices may catch fire.
- Before using the cleaning function, always remove the worst of the food residues and remnants from the cooking compartment and accessories.

ATTENTION
Using cleaning agents before the pyrolytic self-cleaning cycle may damage the cooking compartment and the glass on the appliance door.
- Before the pyrolytic self-cleaning cycle, do not use any cleaning agents in the cooking compartment or on the inside of the appliance door.

1. Wipe the cooking compartment with a damp cloth.
2. Wipe the door sill and the insides of the doors.
3. Completely remove all traces of cleaning agents.
4. Remove all loose objects from the cooking compartment.
   The shelf supports are pyrolysis-resistant.
   → *"Preparing the cleaning of accessories with the pyrolytic self-cleaning function", Page 39*

19.2 Preparing the cleaning of accessories with the pyrolytic self-cleaning function

GAGGENAU baking trays and grill trays are coated with a pyrolysis-safe enamel. Only clean GAGGENAU baking trays and grill trays with the pyrolytic self-cleaning function.

⚠ WARNING – Risk of fire!
Loose food remnants, fat and meat juices may catch fire.
- Before using the cleaning function, always remove the worst of the food residues and remnants from the cooking compartment and accessories.

ATTENTION
The heat during the pyrolytic self-cleaning function may damage certain accessories.
- Do not clean the wire rack, cast roaster, core temperature probe, baking stone or other accessories using the pyrolytic self-cleaning function.
- Only clean GAGGENAU baking trays and grill trays with the pyrolytic self-cleaning function.

Notes
- Also follow the information for use for the relevant accessory.
- If the cooking compartment is extremely dirty, clean the baking tray or grill tray separately.

1. In each case, only slide one baking tray or grill tray onto the lowest shelf.
2. Slide the baking tray or grill tray in as far as it will go.

19.3 Starting the pyrolytic self-cleaning function

1. Remove all loose objects from the cooking compartment and remove coarse dirt.
2. Completely remove any cleaning agent residue.
3. Swipe repeatedly from left to right until the display shows "Modes & Service".

✔ The display shows the available functions in a list menu.

4. Use the control ring to select the "Pyrolysis" function.
5. Press "Pyrolysis".
6. Press "Start".
7. If required, delay the end time.
   - Press the end time.
   - Use the control ring to set the end time.
   - Press →.
8. Follow the instructions on the display.
9. Press →.
10. Press ▶ to start.
    - If required, press ■ to delay the end time.

    The total duration of the pyrolytic self-cleaning function comprises the cleaning time and cooling period. The time for the relevant section of the pyrolytic self-cleaning function counts down on the display.

✔ For your safety, the appliance locks the appliance door. During cooling, the appliance unlocks the door opening mechanism as soon as the temperature has fallen below 200 °C.
✔ The cleaning time counts down on the display.
✔ If you have delayed the end time, the time until the pyrolytic self-cleaning function starts will count down on the display.
✔ The light in the cooking compartment remains switched off.
✔ A signal tone sounds once the pyrolytic self-cleaning function has ended.
✔ The display shows a message.

11. Once the appliance has cooled down, wipe out the ash that has been left behind in the cooking compartment with a damp cloth.
    Depending on the type and degree of soiling, white deposits may remain on the enamel surfaces. These deposits are harmless. They do not affect the function or service life of your appliance.
12. Press ✓ to confirm.

19.4 Stopping the pyrolytic self-cleaning

- ▸ Press ■ on the control ring.
- ✔ For your safety, the appliance locks the appliance door. During cooling, the appliance unlocks the door opening mechanism as soon as the temperature has fallen below 200 °C.

20 Troubleshooting

You can rectify minor faults on your appliance yourself. Read the troubleshooting information before contacting after-sales service. This will avoid unnecessary costs.

Tip: Permanently connect your appliance to the Home Connect app to automatically receive software updates. This allows errors to be eliminated, performance to be improved and new functions to be made available.

⚠ **WARNING – Risk of injury!**
Improper repairs are dangerous.
- ▸ Repairs to the appliance should only be carried out by trained specialist staff.
- ▸ If the appliance is defective, call Customer Service.
  → *"Customer Service", Page 45*

⚠ **WARNING – Risk of electric shock!**
Improper repairs are dangerous.
- ▸ Repairs to the appliance should only be carried out by trained specialist staff.
- ▸ Only use genuine spare parts when repairing the appliance.
- ▸ If the power cord or the appliance power cable of this appliance is damaged, it must be replaced with a special power cord or special appliance power cable, which is available from the manufacturer or its Customer Service.
- ▸ If the power cord of this appliance is damaged, it must be replaced by trained specialist staff.

20.1 Malfunctions

Fault	Cause and troubleshooting
The appliance is not working.	The mains plug of the power cord is not plugged in. ▸ Connect the appliance to the power supply.
	The circuit breaker in the fuse box has tripped. ▸ Check the circuit breaker in the fuse box.
	There has been a power cut. ▸ Check whether the lighting in your room or other appliances are working.
	Operating error. ▸ Switch off the circuit-breaker for the appliance in the fuse box and switch it back on after approx. 60 seconds.
The appliance does not start.	The appliance door is not fully closed. ▸ Close the appliance door.
The appliance cannot be started via the Home Connect app.	The appliance is not connected to the Home Connect app. ▸ Start the connection between the appliance and the Home Connect app. → *"Setting up Home Connect", Page 29*
	The appliance is connected to the Home Connect app but the remote control function is not activated. ▸ Activate the remote control function in the Home Connect settings →*Page 29*.
The appliance does not work. The display does not respond. The display shows the symbol for the childproof lock 🔒.	Childproof lock is activated. ▸ Deactivate the childproof lock. →*Page 22*
The appliance automatically switches off.	Safety switch-off function: No operation for more than 12 hours. **1.** Press ✓ to confirm the message. **2.** Switch off the appliance.

Fault	Cause and troubleshooting
The appliance does not heat up; the display shows the symbol for demo mode.	The appliance is in demo mode. ▸ Deactivate the demo mode in the basic settings →*Page 31*.
The display always shows the orange ring behind the control ring, even if you are not touching the control ring.	During cleaning, too much moisture got behind the control ring. **1.** Wait until the moisture has evaporated. **2.** If necessary, wait a few hours until the moisture has evaporated.
The display never shows the orange ring behind the control ring, even if you touch the control ring.	During cleaning, too much moisture got behind the control ring. **1.** Wait until the moisture has evaporated. **2.** If necessary, wait a few hours until the moisture has evaporated.
The lighting does not work.	The lighting is defective. **1.** Unplug the appliance from the mains. **2.** Reinsert the mains plug after 10 seconds. **3.** Check whether the "Automatic" setting is selected under "Settings" for the "Interior lighting" basic setting under the "Activation" setting. → *"Changing the basic settings", Page 36* ▸ If the fault cannot be eliminated, inform after-sales service.

20.2 Information on display panel

Fault	Cause and troubleshooting
The display shows the error message "Exx".	An error occurred. **1.** If the display shows an error message, press ⏻. ✔ If the display no longer shows the error message, it was a one-off problem. **2.** If the display continues to show or repeatedly shows the error message, contact customer service →*Page 45* and provide them with the error code.
Display shows "Initialisation".	The initial start-up was not completed successfully. ▸ Carry out the initial start-up. → *"Initial start-up", Page 16*
	The appliance was restored to the factory settings. ▸ Carry out the initial start-up. → *"Initial start-up", Page 16*
	Demo mode was activated during initial start-up and has now been deactivated. ▸ Carry out the initial start-up. → *"Initial start-up", Page 16*

20.3 Power failure

In the event of a power failure, your appliance will switch off.
A power failure will interrupt the ongoing cooking process. The display shows a message.

Switch the appliance back on again after a power failure

1. Press ⏻.
2. Switch the appliance back on again as usual.

20.4 Demo mode

If the display shows , demo mode is activated. The appliance does not heat up.

Deactivating demo mode

1. To briefly disconnect the appliance from the mains, switch off the household fuse or the circuit breaker in the fuse box.
2. Deactivate demo mode within 3 minutes in the basic settings →*Page 31*.

21 Disposal

21.1 Disposing of old appliance

Valuable raw materials can be reused by recycling.

1. Unplug the appliance from the mains.
2. Cut through the power cord.
3. Dispose of the appliance in an environmentally friendly manner.
Information about current disposal methods are available from your specialist dealer or local authority.



This appliance is labelled in accordance with European Directive 2012/19/EU concerning used electrical and electronic appliances (waste electrical and electronic equipment - WEEE).
The guideline determines the framework for the return and recycling of used appliances as applicable throughout the EU.

22 How it works

Here, you can find the ideal settings for various types of food as well as the best accessories and cookware. We have perfectly tailored these recommendations to your appliance.
You can find recommended settings →*Page 24* for some meals in the display under Programmes →*Page 23* or in the Home Connect app.
The following overview only contains standard dishes for test purposes.

22.1 General cooking tips

Take note of the following information when cooking all types of food.

- Always preheat the appliance. This will produce the best cooking results. The cooking times specified refer to a preheated appliance.
- The cooking times specified are intended as a guide. The actual cooking time depends on the quality and temperature of the food before cooking, as well as its weight and thickness.
- If you have not made a particular dish before, start with the shortest specified time. If required, you can continue to cook the food.
- A lower temperature results in more even browning. If necessary, set a higher temperature.
- The values given refer to average quantities for 4 people. If you want to prepare a larger amount, expect a longer cooking time.
- Use the cookware specified. If you use other cookware, the cooking time may be longer or shorter.
- You can use any heat-resistant cookware. Place the ovenware in the centre of the wire rack. For large roasts, you can also use the grill tray or glass tray.
- To ensure optimal heat circulation, do not position the wire racks and baking trays too closely.
- To prepare bulky food items, you can remove the shelf supports.
- Place the rack directly onto the bottom of the cooking compartment and place the food or roaster onto the rack. Do not place the food or roaster directly onto the bottom of the cooking compartment. If required, remove the shelf supports. →*Page 38*
- Open the cooking compartment door on the preheated oven for a short time only and quickly place your food inside the appliance.
- Always use plates, baking tins or ovenproof dishes with the wire rack.
- "Hot air eco" type of heating:
  Energy-saving hot air mode for cakes, bakes and gratins. Optimal use is made of the residual heat. Convenience functions remain switched off (e.g. the interior lighting). The cooking compartment temperature can only be displayed while the appliance is heating up. Do not preheat the oven. Make sure that the cooking compartment is cold and that there is nothing already in there when you place the food inside. Then start the specified cooking time. Always keep the appliance door closed when cooking. This prevents heat loss.
- "Grill" and "Grill + circulated air":
  With these operating modes, there may be a temperature difference between the temperature you have set and the actual temperature inside the oven. This is because grilling and gratinating are fast cooking processes that require high temperatures. Consequently, for browning and roasting, a higher temperature than is actually needed on the surface of the food is selected.

Vegetables

Take note of the recommended settings for vegetables.

- Oven-roasted or oven-baked vegetables are a good alternative to pan-fried vegetables. The different flavours become more concentrated and, because the vegetables are roasted, they have a very distinctive taste. In addition, very little fat is required to prepare the vegetables.
- Clean and prepare the vegetables and mix them with a little oil in a bowl. Place them in a heat-resistant dish or in the glass tray or grill tray and spread them out evenly.
- Mix them thoroughly at least once during the cooking process. Once they are cooked, season them and sprinkle them with fresh herbs to taste.
- Vegetables are good as a hot or cold starter or vegetarian main course, or as an accompaniment to meat and fish.
- For small portions (for 2-3 people), use a heat-resistant dish and place it on the wire rack. If you use the glass tray or grill tray, the food will start to burn or dry out.
- Always follow the manufacturer's instructions for precooked and frozen products, too.

Fish

Take note of the recommended settings for fish.

- For food hygiene reasons, ensure that fish has a core temperature of at least 62-70 °C after cooking. This is also the ideal cooking temperature.
- Do not season the fish with salt until it is fully cooked. This ensures that the natural flavour is maintained and that less water is drawn out of the fish.
- Use a small amount of oil to grease the wire rack or baking tray so that the fish does not stick to it.
- For fillets with skin: Place the fish on the rack or tray with the skin side up – this helps to hold the fish together and maintain its flavour.
- Shorten the wooden skewers or, before skewering the ingredients, leave the skewers to soak in water overnight to prevent them from charring.
- Always follow the manufacturer's instructions for precooked and frozen products, too.

Poultry

Take note of the recommended settings for poultry.

- The cooking times listed are intended as a guide only and depend heavily on the temperature of the meat at the start of cooking. Use the core temperature probe so that you can monitor the core temperature more easily. Insert the core temperature probe between the belly and the thigh, rather than in the middle or in a cavity. Further information and instructions, as well as

optimal target temperatures, can be found in the section entitled Core temperature probe →*Page 26*.
- Poultry will turn out particularly crispy and brown if you baste it towards the end of the roasting time with butter, salted water, drained fat or orange juice.
- When cooking duck or goose, pierce the skin underneath the wings to allow the fat to run out.
- Use a roaster or another heat-resistant baking dish or tin for dishes that involve adding a lot of liquid to the roast. The same applies if a lot of fat is likely to drain from the food, e.g. roast goose.

Meat

Take note of the recommended settings for meat.

- The cooking times listed are intended as a guide only and depend heavily on the temperature of the meat at the start of cooking and on how long the meat was seared for. Use the core temperature probe so that you can monitor the core temperature more easily. Information and instructions, as well as optimal target temperatures, can be found in the section entitled Core temperature probe →*Page 26*.
- Time to rest: Allow the meat to rest for 5-15 minutes on a wire rack after cooking. This gives the meat a chance to "relax". The circulation of the meat juice slows and, when the meat is cut, less juice is lost. Large pieces of meat, e.g. joints, can be left to rest in the oven. Smaller pieces of meat, e.g. steaks, should be wrapped in aluminium foil and left to rest outside the oven.
- For small portions (2-3 people), it is a good idea to use a heat-resistant baking dish or tin so that the food does not begin to burn or dry out.
- Use the grill tray or roaster for a large joint of meat and for preparation methods that involve adding a lot of liquid to the joint.
- For best results, leave meat to marinate overnight and remove the marinade before roasting or grilling, e.g. using the back of a knife or a spoon. Otherwise, the herbs and spices will burn.
- If the joint of meat has become too dark in colour and the skin is burnt in places, reduce the set temperature the next time you cook a joint and check the shelf level.
- If the joint is cooked but the sauce is slightly burnt, use a smaller roaster the next time you cook a joint and add more liquid. If the sauce is too watery, use a larger roaster and add less liquid.

Side dishes and meals

Take note of the recommended settings for side dishes and meals.

- The best known oven-cooked side dishes are potato-based, such as potato gratin. However, you can also achieve excellent results when oven-cooking side dishes that are normally pan-fried, e.g. potato fritters and fried potatoes. The advantages of this preparation method: You can prepare relatively large quantities of food at the same time, the cooking smells do not spread so far in the room, and the food can be prepared using less fat.
- Another highly versatile oven-cooked side dish is cheese. It is a very good addition to vegetarian dishes in particular; depending on the preparation method, you can also serve cheese as a starter or finger food.
- Grilled dishes such as bakes and gratins are particularly well suited to being prepared in the oven. Dishes with a dough or pastry base, e.g. pizza and savoury flan, and egg dishes with a filling, e.g. tortilla, are also suitable.
- For small portions (for 2-3 people), use a heat-resistant dish and place it on the wire rack. If you use the glass tray or grill tray, the food will start to burn or dry out.
- Always follow the manufacturer's instructions for pre-cooked and frozen products, too.

Baked items

Note the recommended settings for baked items.

- We recommend using dark-coloured metal baking tins as these absorb heat more effectively. Place the baking tin in the centre of the wire rack.
- If you are baking tray bakes without greaseproof paper, lightly grease the baking tray beforehand.
- Small baked items, e.g. cream puffs, biscuits and puff pastry parcels, can be baked on 2 levels, 1+3.
- If you are baking on more than one level, it is normal for food on baking trays placed in the oven at the same time to be ready at different times. Leave the food on the baking trays lower down in the oven to cook for a little longer, or place them in the appliance earlier next time.
- Before cutting the baked items, leave them to cool on a wire rack.
- If the baked items are too dark on the bottom, place them a level up and select a lower temperature.
  If the baked items are too dark on the top, place them a level down, select a lower temperature and extend the baking time a little.
- If the cake is too dry, set the temperature a little higher. If the cake remains uncooked in the middle, set a lower temperature.
  Baking times cannot be reduced by setting a higher temperature; it is better to set the temperature a little lower.
- If the cake collapses, use less liquid or set the temperature 10 °C lower. Do not open the oven door too soon.
- If the cake only rises in the middle, grease the sides of the baking tin.
- Do not remove the biscuits from the baking tray; place the baking tray back into the hot oven for a short period and remove the biscuits whilst they are still hot.
- If the cake does not come away from the tin when you are trying to turn it out, carefully slide a knife around the sides to loosen it. Turn the cake tin upside down again and cover it several times with a cold, wet cloth. Next time, grease the tin well and sprinkle some bread crumbs into it.
- Always follow the manufacturer's instructions for pre-cooked and frozen products, too.

Desserts

Note the recommended settings for desserts.

- Oven-cooked desserts are very easy to prepare – all that remains is to put them in the oven. This prepara-

tion method is useful for relatively large quantities, for example if you have guests.
- Oven-cooked desserts are generally eaten hot, and are very enjoyable particularly during the colder months.

22.2 Tips for keeping acrylamide levels to a minimum when cooking

General information

- Keep cooking times as short as possible.
  Cook food until it is golden brown, but not too dark. Use large, thick pieces of food. Cooking produces less acrylamide.

Baked goods

- Set the temperature for the "Hot air plus" type of heating to max. 180 °C.

Biscuits

- Brush biscuits with egg or egg yolk. This reduces the production of acrylamide.
  Spread out a single layer evenly on the baking tray.

Oven chips

- Spread the chips out evenly and in a single layer on the baking tray.
  Cook at least 400 g at once on a baking tray so that the chips do not dry out.

22.3 Test dishes

These overviews have been produced for test institutes to facilitate appliance testing in accordance with EN 60350-1:2013 or IEC 60350-1:2011 and EN 60705:2012, IEC 60705:2010.

Cooking

Food	Accessory/ cookware	Level	Temperature in °C	Type of heating	Cooking time in mins	Comments
Chicken, whole, 1 kg, in accordance with EN60350-1	Wire rack + grill tray	2	190		60-80	Preheat.

Grilling

Food	Accessory/ cookware	Level	Temperature in °C	Type of heating	Cooking time in mins	Comments
Chicken, whole, 1 kg, in accordance with EN60350-1	Wire rack + grill tray	2	190		60-80	Do not preheat.

Baked items

Food	Accessory/ cookware	Level	Temperature in °C	Type of heating	Cooking time in mins	Comments
Apple pie, EN60350-1	20 cm springform cake tin	2	160		90-105 [1]	Preheat.
Apple pie, EN60350-1	20 cm springform cake tin	2	160		90-105 [1]	Preheat.
Small cakes, in accordance with EN 60350-1	Baking tray + glass tray	3 and 1	150		30-33 [1]	Preheat. Applies to baking on 2 levels.
Small cakes, in accordance with EN 60350-1	Baking tray	2	150		30-33 [1]	Preheat.
Small cakes, in accordance with EN 60350-1	Baking tray	2	160		24-28 [1]	Preheat.

[1] Deactivate the "Rapid heating" function in the basic settings. → *"Basic settings", Page 31*

Food	Accessory/ cookware	Level	Temperature in °C	Type of heating	Cooking time in mins	Comments
Small cakes, in accordance with EN 60350-1	Baking tray	2	170		30 [1]	Do not preheat.
Shortbread, in accordance with EN 60350-1	Baking tray + glass tray	3 and 1	140		30-35 [1]	Preheat. Applies to baking on 2 levels.
Shortbread, in accordance with EN 60350-1	Baking tray	2	140		30-35 [1]	Preheat.
Shortbread, in accordance with EN 60350-1	Baking tray	2	140		25-35 [1]	Preheat.
Water sponge cake, in accordance with EN60350-1	Springform cake tin, diameter 26 cm.	2	150		22-30 [1]	Preheat.
Water sponge cake, in accordance with EN60350-1	Springform cake tin, diameter 26 cm.	2	175		22-26 [1]	Preheat.
Water sponge cake, in accordance with EN60350-1	Springform cake tin, diameter 26 cm.	2	170		30-35 [1]	Do not preheat.

23 Information regarding Free and Open Source Software

This product includes software components that are licensed by the copyright holders as free software or open source software.
The applicable licence information is stored on your home appliance. You can also access the applicable licence information via your Home Connect app: "Profile -> Legal information -> Licence Information".[2] You can also download the licence information on the brand product website. (Please search on the product website for your appliance model and additional documents). Alternatively, you can request the relevant information from ossrequest@bshg.com or BSH Hausgeräte GmbH, Carl-Wery-Str. 34, 81739 Munich, Germany.
The relevant source code will be made available on request.
Please send your request to ossrequest@bshg.com or BSH Hausgeräte GmbH, Carl-Wery-Str.34, 81739 Munich, Germany.
Subject: „OSSREQUEST“
The cost of performing your request will be charged to you. This offer is valid for three years from the date of purchase or at least as long as we offer support and spare parts for the relevant appliance.

24 Customer Service

Function-relevant genuine spare parts according to the corresponding Ecodesign Directive can be obtained from Customer Service for a period of at least 10 years from the date on which your appliance was placed on the market within the European Economic Area.

Furthermore, our Customer Service will continue to provide you with other function-relevant and storable genuine spare parts for up to 15 years from the date on which your appliance was placed on the market.
For more information, please contact our Customer Service team.

[1] Deactivate the "Rapid heating" function in the basic settings. → *"Basic settings", Page 31*
[2] Depending on the appliance specifications

Note: Under the terms of the manufacturer's warranty the use of Customer Service is free of charge.

Detailed information about the warranty period and the warranty conditions in your country is available via the QR code on the enclosed document on service contacts and warranty conditions, from our customer service or on our website.
You can find the contact details for our customer service via the QR code on the enclosed document on service contacts and warranty conditions or on our website.
This product contains light sources from energy efficiency class F. These light sources are available as a spare part and should only be replaced by trained specialist staff.
You can find the information required as per Regulations (EU) 65/2014, (EU) 66/2014 and (EU) 2023/826 online at *www.gaggenau.com* on the product and service pages for your appliance, in the area of user manuals and additional documents.

Product information according to (EU) 66/2014 are also available below the printed energy label.

24.1 Product number (E-Nr.), production number (FD) and consecutive numbering (Z-Nr.)

If you contact Customer Service, you will require the product number (E-Nr.), the production number (FD) and the consecutive numbering (Z-Nr.), which you can find on the appliance's rating plate.
You will see the rating plate with these numbers if you open the appliance door.



Make a note of your appliance's details and the Customer Service telephone number to find them again quickly.

25 Declaration of Conformity

BSH Hausgeräte GmbH hereby declares that the appliance with Home Connect functionality conforms to the essential requirements and other relevant provisions of Directive 2014/53/EU.
A detailed RED Declaration of Conformity can be found online at *www.gaggenau.com* among the additional documents on the product page for your appliance.

CE

Hereby, BSH Hausgeräte GmbH declares that the appliance with Home Connect functionality is in compliance with relevant statutory requirements. [1]
A detailed Declaration of Conformity can be found online at *www.gaggenau.com/gb* among the additional documents on the product page for your appliance. [1]

UK CA

2.4 GHz band (2400–2483.5 MHz): Max. 100 mW
5-GHz band (5150–5350 MHz + 5470–5725 MHz): max. 150 mW

	BE	BG	CZ	DK	DE	EE	IE	EL	ES
	FR	HR	IT	CY	LI	LV	LT	LU	HU
	MT	NL	AT	PL	PT	RO	SI	SK	FI
	SE	NO	CH	TR	IS	UK (NI)			
5 GHz WLAN (Wi-Fi): For indoor use only.									

AL	BA	MD	ME	MK	RS	UK	UA
5 GHz WLAN (Wi-Fi): For indoor use only.							

25.1 Statement of Compliance for Great Britain

Product type
This statement of compliance covers the products described in this information for use whose model identifier group is seen on the title page. The full model identifier is made up of the characters before the slash in the product number (E no.) which can be found on the rating plate. Alternatively, you can also find the model identifier in the first line of the UK Energy Label.

Name and address of manufacturer
BSH Hausgeräte GmbH, Carl-Wery-Strasse 34, 81739 München, Germany

[1] Only applies to Great Britain

This statement of compliance is prepared by the manufacturer.

The manufacturer, BSH Hausgeräte GmbH deems that it has complied with

- provision 5.1-1 of ETSI EN 303 645 v3.1.3 and, where relevant, provision 5.1-2 of ETSI EN 303 645 v3.1.3;
- provision 5.2-1 of ETSI EN 303 645 v3.1.3;
- provision 5.3-13 of ETSI EN 303 645 v3.1.3.

Support period

BSH Hausgeräte GmbH will provide security updates that are necessary to maintain the main functions free of charge until at least 28/02/2036.

26 Installation instructions

Observe this information when installing the appliance.

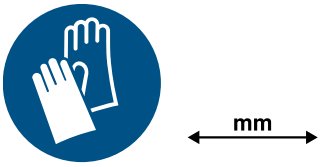

⚠ 26.1 General installation instructions

Follow these instructions before you start installing the appliance.

⚠ WARNING – Risk of fire!

It is dangerous to use an extended power cord and non-approved adapters.

- ▸ Do not use extension cables or multiple socket strips.
- ▸ Only use adapters and power cords approved by the manufacturer.
- ▸ If the power cord is too short and a longer one is not available, please contact an electrician to have the domestic installation adapted.

⚠ WARNING – Risk of injury!

The appliance is heavy.

- ▸ To move the appliance, two people are required.
- ▸ Use only suitable tools and equipment.

ATTENTION

Carrying the appliance by the appliance frame may cause it to bend. The appliance frame cannot support the weight of the appliance.

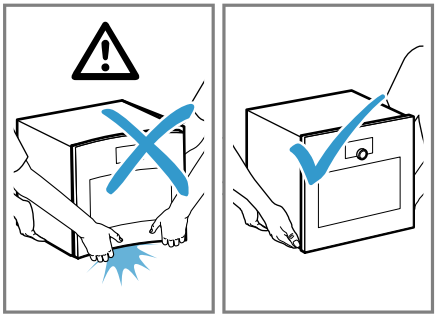

- ▸ Do not lift the appliance using the appliance frame.
- ▸ Always lift the appliance at the casing.

⚠ WARNING – Risk of injury!

Sharp-edged parts may be accessible during installation.

- ▸ Wear protective gloves.

⚠ WARNING – Risk of electric shock!

Incorrect installation is dangerous.

- ▸ Connect and operate the appliance only in accordance with the specifications on the rating plate.
- ▸ Connect the appliance to a power supply with alternating current only via a properly installed socket with earthing.
- ▸ The protective conductor system of the domestic electrical installation must be properly installed.
- ▸ Never equip the appliance with an external switching device, e.g. a timer or remote control.
- ▸ When the appliance is installed, the mains plug of the power cord must be freely accessible. If free access is not possible, an isolating switch must be integrated into the permanent electrical installation according to the installation regulations.
- ▸ When installing the appliance, check that the power cable is not trapped or damaged.

ATTENTION

Surface damage caused by pulling or pushing the appliance.

- ▸ Do not pull or push the appliance; lift it instead.
- ▸ Place a tea towel under the appliance.

- Read this instruction manual carefully.
- Only an appliance which has been correctly installed in accordance with these installation instructions can be used safely. The installer shall be liable for damages incurred as a result of incorrect installation.
- Switch off the power supply before carrying out any work.
- Check the appliance for damage after unpacking it. Do not connect the appliance if it has been damaged in transit.

- Only a licensed professional may connect appliances without plugs. Damage caused by incorrect connection is not covered under the warranty.
- Do not lift the appliance using the door, the bottom air strip or the appliance frame.
- When installing, observe the current, valid building regulations as well as the regional power company's regulations.
- Install the appliance in accordance with the installation diagram. Observe the minimum clearances.
- Installation behind cabinet doors: Suitable measures should be taken to ensure these types of doors cannot close during operation. There is a risk of overheating if the door does not remain open during operation or during cooling (fan operation).
- Before starting up the appliance, remove any packaging material and adhesive film from the cooking compartment and the door.
- The dimensions in the figures are in mm.

26.2 QR code for the installation video

This is where you will find the QR code for the installation video.



26.3 Planning notes

This is where you find an overview of the planning notes for the door direction, corner solutions and lateral drawers.

- The door direction cannot be reversed.
- The clearance from the furniture cavity to the door panel surface is 42 mm.
- Consider the overhang when planning to open drawers next to the appliance.
- When planning a corner solution, consider a door opening angle of at least 97°.
- The appliance's mains socket must be located outside of the built-in niche.

26.4 Appliance dimensions

You will find the dimensions of the appliance here

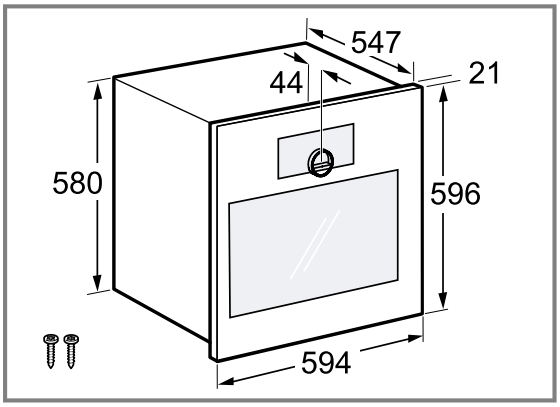

26.5 Installation accessories

Use original accessories.

Accessories	Order number
Intermediate floor	GA601010

26.6 Preparing the units

Requirement: Fitted units must be heat-resistant up to 90 °C, and adjacent unit fronts up to 70 °C.

1. Ensure that the mains socket is located outside of the built-in niche.
2. Carry out cut-out work on the units and then insert the appliance.
3. After making the cut-outs, remove any shavings. Shavings may impair the function of electrical components.
4. Secure any unsecured units to the wall using a standard bracket.
5. Install the appliance only so high that the customer can remove any accessories effortlessly.

26.7 Electrical connection

In order to safely connect the appliance to the electrical system, follow these instructions.

⚠ **WARNING – Risk of electric shock!**

Improper repairs are dangerous.

- ▸ Repairs to the appliance should only be carried out by trained specialist staff.
- ▸ Only use genuine spare parts when repairing the appliance.
- ▸ If the power cord or the appliance power cable of this appliance is damaged, it must be replaced with a special power cord or special appliance power cable, which is available from the manufacturer or its Customer Service.
- ▸ If the power cord of this appliance is damaged, it must be replaced by trained specialist staff.

It must always be possible to disconnect the appliance from the electricity supply. The appliance must only be connected to a protective contact socket that has been correctly installed.

- ▸ The mains plug for the mains power cable must be easily accessible after the appliance is installed.

- ▸ If this is not possible, an all-pole isolating switch must be integrated into the permanent electrical installation according to the conditions of overvoltage category III and according to the installation regulations.
- ▸ The permanent electrical installation must only be wired by a professional electrician. We recommend installing a residual-current circuit breaker (RCCB) in the appliance's power supply circuit.

- The appliance corresponds to protection class I and must only be operated with a protective earth connection.
- Fuse protection by means of B- or C-type circuit breakers is required.
- The appliance must be disconnected from the power supply whenever installation work is being carried out.
- The power cable must correspond to type H05 VV-F or a higher rating.
- The appliance must only be connected using the power cable provided. Fully connect the power cord to the back of the appliance.

Power cable with a plug with earthing contact

For an appliance with a plug with earthing contact, follow these instructions.

- Connect the appliance only to a correctly installed, earthed socket.
- If the plug with earthing contact can no longer be accessed after installation, an energy-isolating device in the phases must be provided in the permanent electrical installation in accordance with the installation regulations.
- Do not use extension cables, socket strips or multiple socket strips. Overloading leads to a risk of fire.

Power cable without a plug with earthing contact

For an appliance without a plug with earthing contact, follow these instructions.

Note: Only a licensed professional may connect appliances without plugs. Damage caused by incorrect connection is not covered under the warranty.
An isolating switch must be integrated into the permanent electrical installation according to the installation regulations.

Connecting a power cord without a plug with earthing contact

1. Identify the phase (external conductor) and neutral conductor in the mains socket.
   The appliance may be damaged if it is not connected correctly.
2. Observe the specifications on the rating plate.
3. Connect the wires of the mains power cable according to the colour coding:
   - GN/YE: Green and yellow = Conductor ⏚
   - BU: Blue = Neutral conductor
   - BN: Brown = Phase (external conductor)

26.8 Installing the appliance

ATTENTION
Sharp-edged screwdrivers may damage the control panel.
- ▸ Use a suitable screwdriver.
- ▸ Do not scratch the control panel.

Note: The red label sticking out of the appliance door provides support during installation. Before connecting to the mains, pull on the red label to open the appliance door.

1. Observe the clearances when installing in a tall unit.
   - ▸ Note the dimensions for the built-in niche in the intermediate floor.

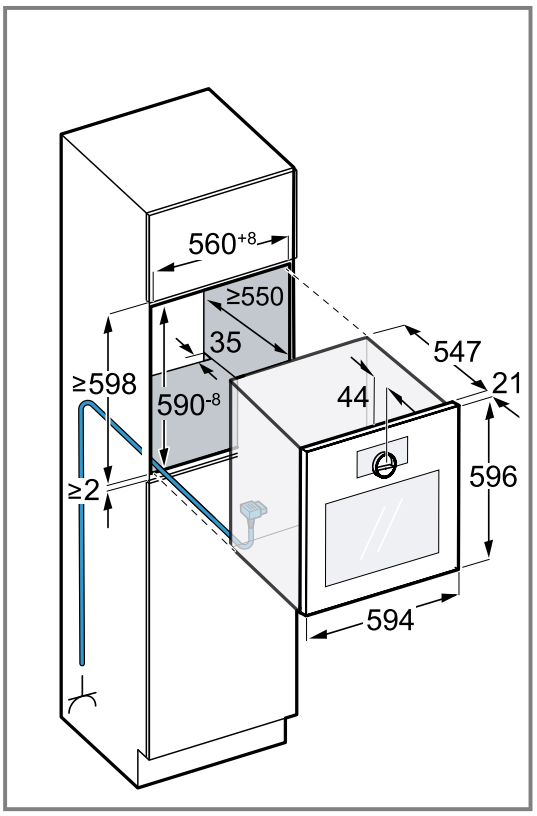

Depending on the product variant, the appliance is equipped with or without a plug.

2. When installing beside a wall, ensure that the potential opening angle of the appliance door is based on the minimum clearances to the wall.

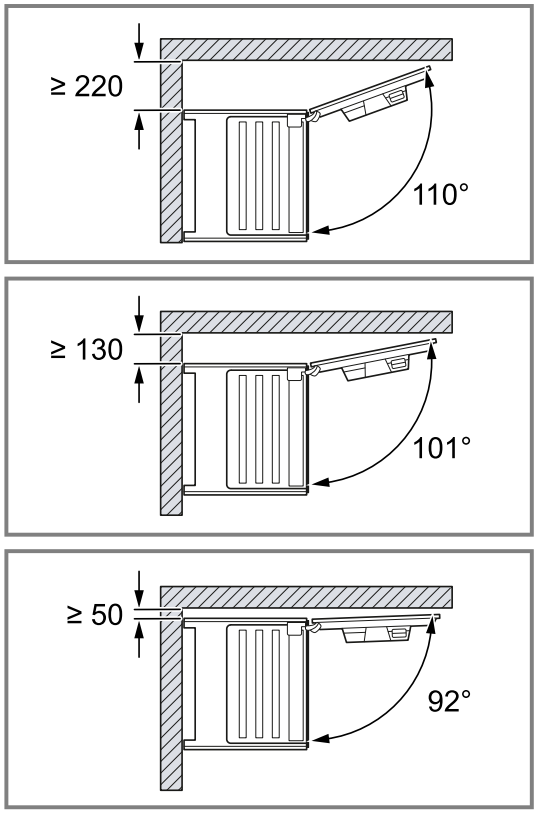

3. When installing 2 appliances on top of each other, observe the clearances.
   - Make sure that the distance between the appliance and the wall is at least 35 mm.

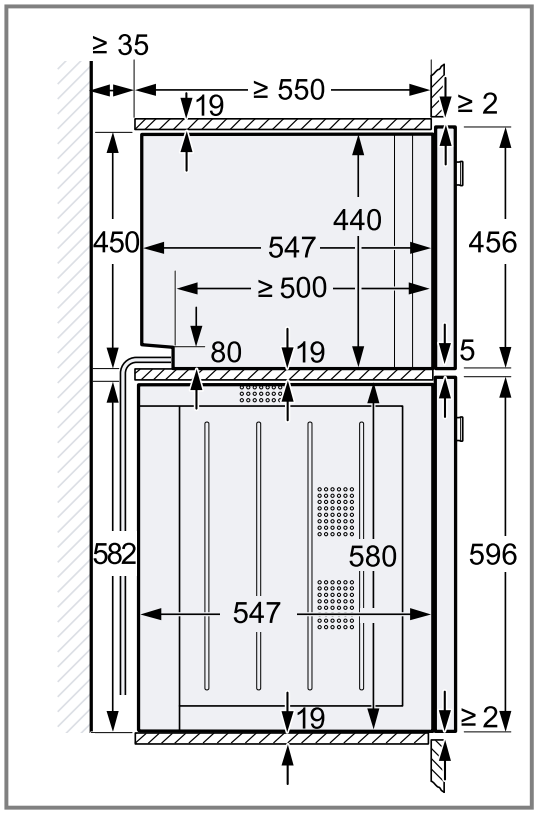

4. If there is no intermediate floor above the appliance, secure the appliance against tipping in the built-in niche.
   - Secure two brackets from the GA601010 installation accessories to both sides of the built-in niche.
   - Observe the installation instructions for the brackets.
5. **Note:** Ensure that you adjust all white plastic elements on the appliance: Left and right, top and bottom.
   If the thickness of the side sections of the unit is 16 mm, do not remove the white plastic elements. The white plastic elements provide support when centring the appliance.
6. If the thickness of the side sections of the unit is 20 mm, remove the white plastic elements.

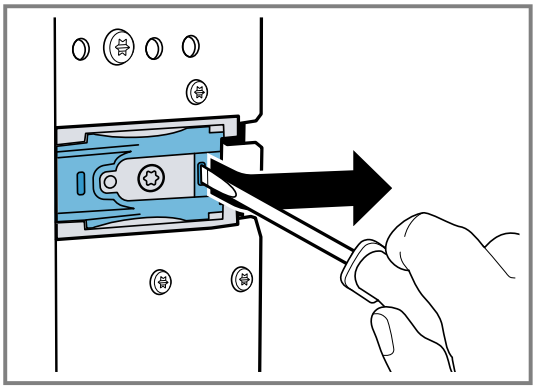

7. If the thickness of the side sections of the unit is 19 mm, remove the white plastic elements ①, turn them 180° ② and refit them ③.

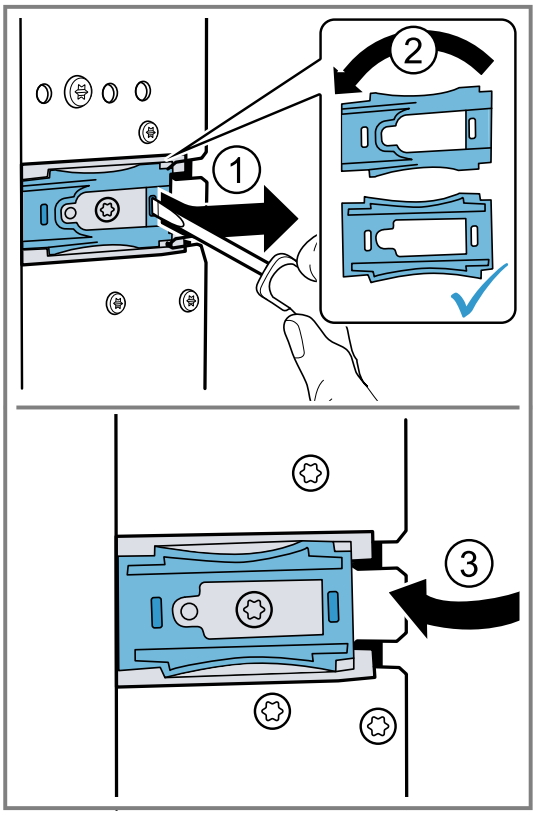

8. Push the appliance all the way into the built-in unit.
   - Do not kink or trap the connection cable, or route it over sharp edges.

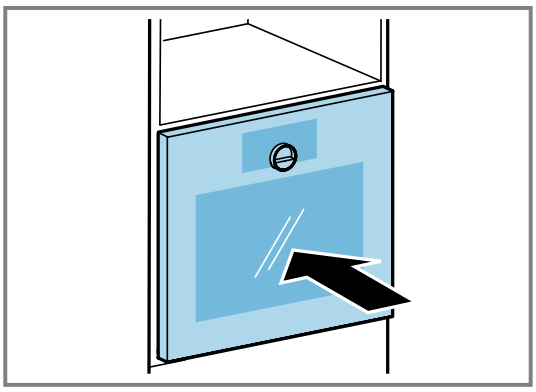

9. Centre the appliance.
   There must be an air gap of at least 2 mm between the appliance and the adjacent unit fronts.
10. Use a spirit level to adjust the appliance so that it is perfectly level.
11. Open the appliance door.

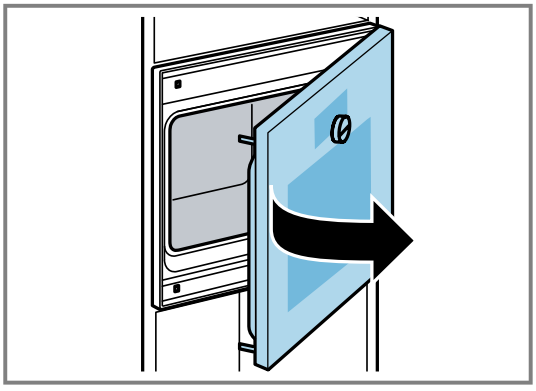

12. Secure the appliance using the enclosed screws.

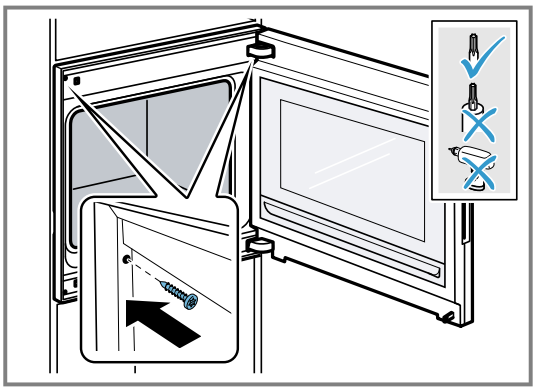

13. Remove the transit bolt from the door.

26.9 Adjustable intermediate floors with brackets

An adjustable intermediate floor with brackets (GA601010) is available for your appliance.

ATTENTION
If you install appliances on the intermediate floor with brackets that are too heavy, the intermediate floor may bend.
- Do not install the intermediate floor with brackets below an oven.

If you do not install the appliance correctly on intermediate floor GA601010, the intermediate floor may bend.
- Do not position the appliance at an angle in the recess on the intermediate floor.
- Slide the appliance into the tall unit parallel to the side walls of the recess.

Note: Do not install a microwave below a fully automatic coffee machine.

Only install the intermediate floor with brackets:
- Below a combi-steam oven in the same series.
- Below a microwave in the same series.
- Below a fully automatic coffee machine that you install above an oven in the same series.
- Below a fully automatic coffee machine that you install above a combi-steam oven in the same series.

Do not install the intermediate floor with brackets:
- Below an oven.
- Between two fully automatic coffee machines that you want to install vertically stacked.
- Above a combi-steam oven in the same series.

Installing the appliance above intermediate floors with brackets

- Do not position the appliance at an angle in the recess on the intermediate floor with brackets. Slide the appliance into the tall unit parallel to the side walls of the recess.

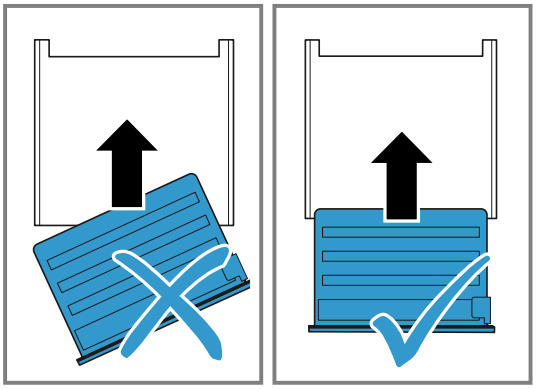

26.10 Aligning the appliance door

The appliance door is already aligned when the appliance is delivered. Alignment is not normally required. If you install multiple appliances next to each other or on top of each other, align the appliance door.
- Correct the appliance height →*Page 51*
- Changing the door opening angle

Correcting the appliance height

1. Pull the appliance out slightly from its built-in niche.

2. Loosen the locking screw.

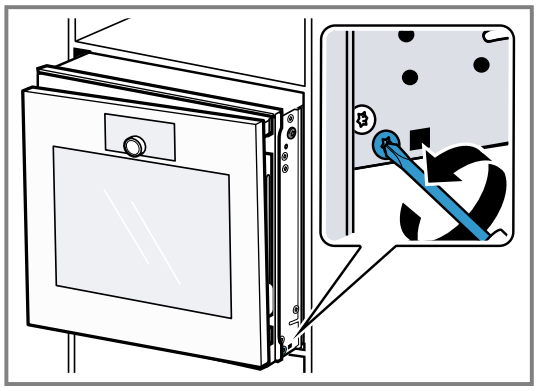

3. Open the appliance door.
4. Use the setting screw to correct the appliance height.

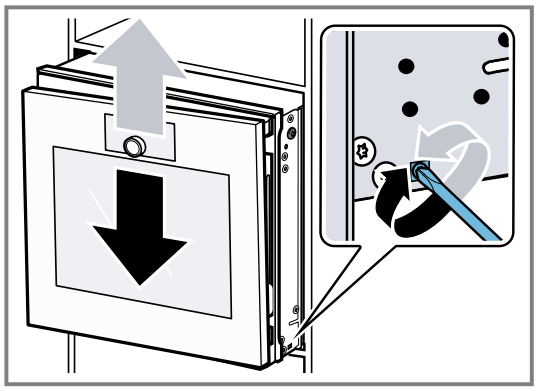

5. Tighten the locking screw.
6. Slide the appliance into the built-in niche.

Changing the door opening angle

There are two available opening angles for the appliance door.

1. Pull the appliance out slightly from its built-in recess.
2. Loosen the screw on the right-hand side at the very rear of the appliance slightly.

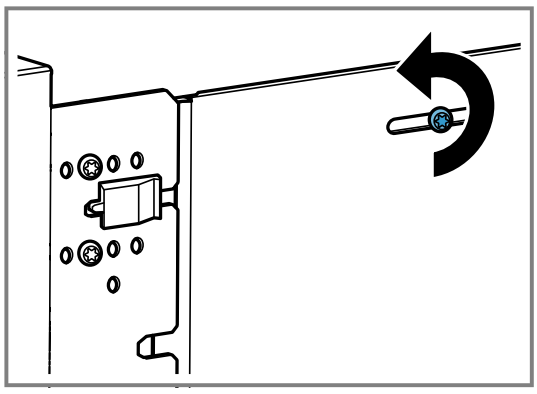

3. Remove the two screws in front of the black plastic element.

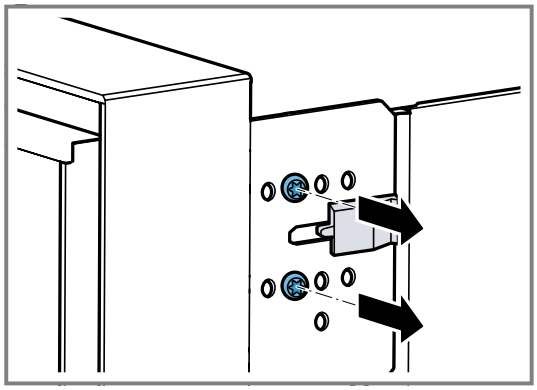

4. Slide the black plastic element to the right.

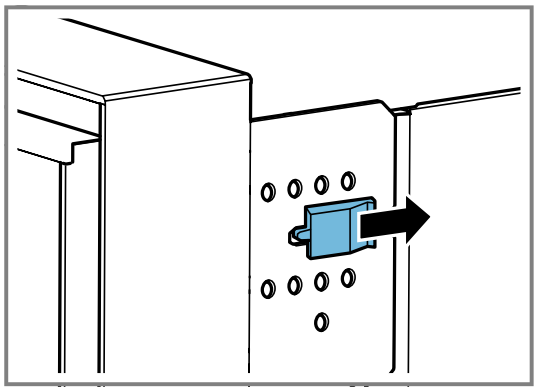

5. Screw the two screws into the holes further to the right on the appliance.

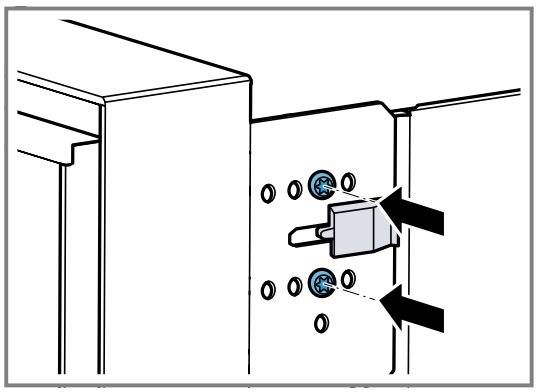

The further right you screw the screws into the appliance, the smaller the door opening angle.
When the screws are positioned to the right, the opening angle of the appliance door is approx. 92°.

26.11 Starting up the appliance after installation

Requirement: The appliance has been installed and connected.

1. Press ⏻ on the control ring.
✔ The display shows the GAGGENAU logo for approx. 30 seconds and then "Initialisation".
2. Set the language.
3. Follow the information in the installation assistant on the display.
   ▸ Press → or turn the control ring.
4. Select the settings for the "Installation height".

5. Aligns the display horizontally or vertically depending on the installation position or the user's body size.
6. Deactivate demo mode.

26.12 Combining the appliance with a combi-steam oven

1. Only combine suitable appliances of the same brand and series.
2. Install the combi-steam oven first.
3. Observe the installation instructions for the combi-steam oven.

26.13 Combining the appliance with a fully automatic coffee machine

1. Only combine suitable appliances of the same brand and series.
2. Follow the installation instructions for the fully automatic coffee machine and for the intermediate floor.
3. When installing two appliances above each other directly beside a fully automatic coffee machine, use the intermediate floor or the metal bracket between the four appliances.

26.14 Combining the appliance with a warming drawer

ATTENTION
Sharp edges on the appliance may damage the front panel of the warming drawer.

- Do not damage the front panel of the warming drawer when sliding the appliance in.
- Before installing another appliance, open the warming drawer, place a cloth over the front panel and close the warming drawer to protect the front panel of the warming drawer from damage.

1. Only combine suitable appliances of the same brand and series.
2. Install the warming drawer first.
3. Follow the installation instructions for the warming drawer.
4. At a width of 60 cm, slide the oven onto the warming drawer in the fitted cabinet.

26.15 Combining the appliance with a microwave

1. Only combine suitable appliances of the same brand and series.
2. Fit the microwave first, then the oven.

26.16 Removing the appliance

1. Disconnect the appliance from the power supply
2. Undo the fastening screws.
3. Lift the appliance slightly and pull it out completely.

The difference is Gaggenau

gaggenau.com

BSH Hausgeräte GmbH
Carl-Wery-Straße 34
81739 München, GERMANY
www.gaggenau.com

Valid within Great Britain:
Imported to Great Britain by
BSH Home Appliances Ltd.
Grand Union House
Old Wolverton Road
Wolverton, Milton Keynes
MK12 5PT
United Kingdom

9001954075 (060727) REG25
en